MEE09:12

MASTER THESIS REPORT

MASTER OF SCIENCE IN ELECTRICAL ENGINEERING

WITH EMPHASIS ON TELECOMMUNICATIONS

QUALITY OF SERVICE DURING VERTICAL HANDOVER IN 3G/4G WIRELESS NETWORKS

Blekinge Institute of Technology

Feb 2009

STUDENT 1:
MUHAMMAD AMIR LATIF 790721-8072
Email: amir_gcc2006@yahoo.com

STUDENT 2:
ABID AZIZ KHAN 820202-0734
Email: aakb07@student.bth.se

Supervisor: **Dr. Adrian Popescu**
Examiner: **Dr. Adrian Popescu**

ACKNOWLEDGEMENT

All praises and thanks to God, who is the creator of this world and who blessed us with potential and ability to contribute a drop of material to existing ocean of knowledge.

The accomplishment of this Thesis is the result of great effort of me and my group member and the full devotion of our teachers. We would like to sincerely thank our supervisor **Dr. Adrian Popescu**, Blekinge Institute of Technology. Without his guidance and support it would have been impossible for us to accomplish this task successfully. We also want to mention that we never needed to make an appointment with **Dr. Adrian Popescu** because this is his quality that he is always available for his students. We are really impressed with our supervisor **Dr. Adrian Popescu** for his affection with his students.

We are also thankful to our Program Manager **Mr. Mikeal Åsman** and student coordinator **Miss Lena Magnusson** for their help during our stay at BTH.

Secondly we would like to thank our friends Mr. Azhar Ali Mian and Mr. Naeem Qaisar and Mr. Sardar Usman Khalid who helped us towards our task during the research. We particularly like to thank our parents for their continuous love and care.

ABSTRACT

Handover means transferring an on going call or data sessions one cell to another. Handovers occur due to the movement of the mobile user from one area to another area. Handovers are used to prevent an on going call to be disconnected. If we don't use handovers then whenever a user leaves the area of a particular cell then its on going call is immediately disconnected. The process of handovers requires a number of parameters e.g. what is the handover scheme we are using, how many channels are free. In the handover process we should also keep the QoS up to the standard. Vertical handover may be referred to a process of transferring call connected to a network/data session from one channel connected in a cell to the core network of another. A suitably equipped device may be able to use both technologies at a time, the high speed Wireless LAN and cellular technology.

Wireless LAN connections generally provide higher bandwidth but smaller coverage area as compared cellular networks which have lower bandwidth and wide coverage. Thus the user can use a Wireless LAN connection whenever it's available, while when it isn't available can switch to a cellular connection as an alternative. Vertical handover refers to automatic switching the communication/data session from one technology to the other. So, it's different from a horizontal handover among various wireless access points using the same technology. In this thesis we'll try to find out reason behind the quality degradation during vertical handover and try to suggest improvements to maintain a minimum standard of quality during handover. [64, 65, 66, 67]

LIST OF ABBREVIATIONS

1G	First Generation
2G	Second Generation
3G	Third Generation
4G	Fourth Generation
AI	Artificial Intelligence
AMPS	Advance Mobile Phone Service
AP	Access Point
ASST	Application Signal Strength Threshold
BMC	Broadcast and Multicast Sublayer
BS	Base Station
BSS	Basic Service Set
BTS	Base Transceiver Station
CA	Collision Avoidance
CDMA	Code Division Multiple Access
CPCH	Common Packet Channel
CRC	Cyclic Redundancy Check
CSMA	Carrier Sense Multiple Access Technique
DCF	Distributed Coordination Function
DCH	Dedicated Channel
DPDCH	Dedicated Physical Control Channel
DS	Distributed Service
DS-CDMA	Direct-sequence Code Division Multiple Access
DT	Discovery Time
ESS	Extended Service Set
ESSID	Extended Service Set ID
ETSI	European Telecommunication Standard Institute
FBI	Feedback Information
FCS	Frame Check Sequence
FDD	Frequency Division Duplex
FDMA	Frequency Division Multiple Access
GPRS	General Packet Radio Service
GSM	Global System For Mobile Communication
HCC	Handover Control Center
HE	Handover Execute
HiperLAN	High Performance Radio Local Area Network
HSDPA	High Speed Downlink Packet Access
HSPA	High Speed Packet Access
IBSS	Independent Basic Service Set
ITU	International Telecommunication Union
Iu-CS	Iu-Circuit Switch
Iu-PS	Iu-Packet Switch
LOS	Line-Of-Straight
MAC	Medium Access Control
MD	Mobile Download
MN	Mobile Node
MU	Mobile Upload

NA	Network Administrator
NBAP	Node B Application Part
NIC	Network Interface Card
NLOS	Non-Line-Of-Straight
NRTS	Non Real Time Service
NTT	Nippun Telecommunication Telegraph
OFDM	Orthogonal Frequency Division Multiplexing
OFDMA	Orthogonal Frequency Division Multiple Access
OSI	Open System Interconnect
PC	Power Consumption
PCF	Point Coordination Function
PDCP	Packet Data Convergence Protocol
PE	Power Emission
PSTN	Public Service Telephone Network
QoS	Quality of Service
RLC	Radio Link Control
RNC	Radio Network Controller
RNSAP	Radio Network Subsystem Application Part
RRC	Radio Resource Control
RSS	Relative Signal Strength
RTS	Real Time Service
SD	Smart Decision
SM	System Monitor
SSH	Substantial Security Holder
TCP	Transport Power Control
TDD	Time Division Duplex
TDMA	Time Division Multiple Access
TFCI	Transport Format Control Command
TS	Time Slot
UE	User Equipment
UMTS	Universal Mobile Telecommunication System
UPCH	Uplink Packet Channel
USCH	Uplink Shared Channel
USHA	Universal Seamless Handover Architecture
UTRAN	UMTS Terrestrial Radio Access Network
VPN	Virtual Private Network
WAP	Wireless Access Point
WEP	Wired Encryption Protocol
WiBro	Wireless Broadband
WiFi	Wireless Fidelity
WIMAX	Worldwide interoperability for Microwave Access

LIST OF FIGURES

Figure 1.1: Evaluation of Cellular Network………. ……………………………………… 1
Figure 2.1: WLAN Access Points……. ……………………………………………….. 5
Figure 2.2: Lightweight Architecture Model………..……………………………………6
Figure 2.3: Autonomous Architecture Model……… ……………………………………7
Figure 2.4: IEEE 802.11 Protocol Stack…………. ……………………………………7
Figure 2.5: Ad-Hoc Model……………………………………………………………….. 9
Figure 2.6: Infrastructure Model…… ………………………………………………….. 10
Figure 2.7: MAC Frame Format……… ……………………………………………….. 12
Figure 2.8: Frame Control Field……… ……………………………………………….. 13
Figure 3.1: Fundamental Architecture of UMTS…… ……………………………………16
Figure 3.2: Protocol Stack of UMTS…. ……………..……………………………… 17
Figure 3.3: UMTS Domains and Reference Points…. ……………………………………18
Figure 3.4: Fundamental Structure of Wireless Overlay Network…………………………...20
Figure 3.5: CDMA Structure………………………………………………………………… 22
Figure 3.6: Modulation Process……………………………………………………………… 23
Figure 3.7: Fundamental Structure of DPDCH and DPCCH…………………………….... 24
Figure 3.8: RACH Slots and Spacing……………………………………………………….... 24
Figure 3.9: Architecture of QoS………………………………………………………………25
Figure 3.10: UMTS-WLAN Interworking Model…………………………………………… 27
Figure 4.1: Vertical and Horizontal Handover in Heterogeneous Network……………………. 29
Figure 4.2: MS Movement in Handover Model…………………………………………………30
Figure 4.3: Fundamental Structure of USHA…………………………………………….... 31
Figure 4.4: Supporting Smart Decision Model…………………………………………………32
Figure 4.5: Architecture of Vertical Mobility…………………………………………….....34
Figure 4.6: Base Station Deployed in Street……………………………………………………36
Figure 5.1: Mobile Downward Handover Signaling Flow…………………………………... 40
Figure 5.2: Mobile Upward Handover Signaling Flow………………………………………… 41
Figure 5.3: Vertical Handover Algorithm……………………………………………………… 43
Figure 5.4: Control Mechanism of Vertical Handover ………………………………………… 44
Figure 5.5: Received Signal Strength……………………………………………………….... 50
Figure 5.6: Probability of Expected Number of Handover…………………………………….. 51
Figure 5.7: Packet Delay Probability……………………………………………………………51

LIST OF TABLES

Table 2.1: WLAN Standards…………. ……………………………………………………….. 10
Table 4.1: Difference between Vertical and Horizontal Handover …………………………...35
Table 5.1: Simulation Results Parameters…………...…………………………………….....49

TABLE OF CONTENTS

CHAPTER 1: INTRODUCTION

1.1 Evolution of Cellular Communication………………………………………… 1
1.1.1 First Generation (1G)……………………………………………..1
1.1.2 Second Generation (2G)…………………………………………2
1.1.3 Third Generation (3G)……………………………………………2
1.1.4 Fourth Generation (4G)…………………………………………….. 3
1.2 Emerging Technology…………………………………………………………..3
1.2.1 Wireless LAN……………………………………………………3
1.2.2 WIMAX……………………………………………………………..4
1.2.3 WiBro…...…………………………………………………………....4
1.2.4 HSDPA……………………………………………………………... 4
1.2.5 HSPA………………………………………………………………… 4

CHAPTER 2: WIRELESS LAN

2.1 Introduction…………………………………………………………………….. 5
2.2 Architecture of Wireless LAN………………………………………………. 5
2.2.1 Light Weight Model……………………………………………... 5
2.2.2 Autonomous Model…………………………………………… 6
2.3 Wireless LAN Protocol Stack…………………………………….............. 7
2.4 Wireless LAN Components………………………………………………… 8
2.4.1 Basic Service Set…………………………………………………… 8
2.4.2 Extended Service Set (ESS)……………………………............... 8
2.4.3 Distribution System (DS)……………………………................... 9
2.4.4 Mobile Node (MN)……………………………............................. 9
2.4.5 Access Point (AP)……………………………............................... 9
2.5 Network Topologies of Wireless LAN…………………………………… 9
2.5.1 Ad-Hoc Model……………………………................................... 9
2.5.2 Infrastructure Model……………………………......................10
2.6 Wireless LAN Standards……………………………………………………..10
2.6.1 IEEE 802.11……………………………..11
2.6.2 IEEE 802.11b……………………………......................................11
2.6.3 IEEE 802.11a and HiperLAN……………………….......................11
2.6.4 HiperLAN……………………………………………………………...11
2.6.5 IEEE 802.11g……………………………..12
2.7 IEEE 802.11 Physical MAC Frame Format………………………………….12
2.7.1 Frame Control Field……………………………………................13
2.8 Security Issues in Wireless LAN………………………………………………. 13
2.8.1 Security Issues between Wireless/Wired Network……....................13
2.8.2 The War of Driving and Chalking……………………......................14
2.8.3 Wired Equivalent Privacy Protocol Flaws……………….................14
2.8.4 Counter Measures to WLAN Security Flaws…………....................14

CHAPTER 3: UMTS

3.1 Introduction………………………………………………………………….. 16
3.2 UMTS Architecture……………………………………………………..16
3.3 UMTS Protocol Stack……………………………………………….. 17
3.4 UMTS Domains…………………………………………………………... 18
3.5 UTRAN Air Interface……………………………………………….. 18
3.6 UMTS Interface Types………………………………………………19
3.6.1 Iu Interface………………………………….……................19
3.6.2 IuPs Interface……………………………….……..............19
3.6.3 IuCs Interface…………………………….……............. 19
3.6.4 Iub Interface ………………………….……............ 19
3.6.5 Iur Interface ……………………….……................................ 19
3.6.6 Uu Interface……………..……………………………………… 19
3.7 UMTS Handover Techniques…………..……………………………20
3.7.1 Hard Handover..………..…………………………………… 21
3.7.2 Soft Handover………..…………………………………… 21
3.7.3 Softer Handover……...……………………………………...21
3.8 WCDMA…………………...……………..……………………………… 21
3.8.1 WCDMA Physical Layer……………………………………22
3.8.1.1 Dedicated Transport Channel………………………... 23
3.8.1.2 Common Transport Channel………………………... 23
3.8.1.3 FDD Physical Channel Configuration……………...... 23
3.8.1.4 Up/Downlink Modulation Process…………………... 23
3.8.1.5 Dedicated Uplink Physical Channel………………..... 23
3.8.1.6 Spreading DPCCH and DPDCH……………………...24
3.8.1.7 Common Uplink Physical Channel…………………...24
3.9 UMTS Services …………..……………..…………………………...... 25
3.9.1 Services Classes……………………………………………..25
3.9.1.1 Conventional Class………………….......................... 25
3.9.1.2 Streaming Class……………….…………….............. 26
3.9.1.3 Interactive Class…………………...........................26
3.9.1.4 Background Class…………………........................... 26
3.10 UMTS Future Perspectives…………………………………………………….. 26
3.10.1 Liberalization Policies of European Union………………………... 26
3.10.2 Social Aspects……………………...…………………………..26
3.10.3 Security Matter for Personal Communication Technologies………. 27
3.11 Interworking Requirements……………………………………………………..27
3.11.1 Interworking Model……………………………...…………27
3.11.2 Interoperability……………………………………...……………… 28
3.11.3 User Equipment……………………………………………………… 28

CHAPTER 4: VERTICAL HANDOVER TECHNIQUES

4.1 Introduction………………………………………………………….......... 29
4.2 Handover Initiation Techniques…………………………………………....... 30
4.2.1 Relative Signal Strength………………………………………………30

4.2.2 Relative Signal Strength with Threshold……30
4.2.3 Relative Signal Strength with Hysteresis……31
4.2.4 Relative Signal Strength with Threshold and Hysteresis……31
4.3 Fundamental Structure of USHA……31
4.4 Smart Decision Model……32
4.4.1 Smart Decision Model Process……33
4.4.1.1 Normal Phase……33
4.4.1.2 Priority Phase……33
4.5 Technical Features of VHO……34
4.6 Handover Techniques……35
4.6.1 Horizontal Handover……35
4.6.2 Vertical Handover……35
4.6.3 Downward and Upward Vertical Handover……35
4.6.4 Microcellular Handover……35
4.6.5 Multilayer Handover……36
4.7 Limitations of Vertical Handover……36

CHAPTER 5: VERTICAL HANDOVER IN WLAN

5.1 Introduction……38
5.2 Vertical Handover……38
5.2.1 Discovery Time (t_d)……38
5.2.2 Address Configuration Period (t_c)……38
5.2.3 Network Registration period (t_d)……39
5.3 Vertical Handover Procedures……39
5.4 Power Saving During Handover……41
5.5 Vertical Handover Algorithm……42
5.6 Control Mechanism of Vertical Handover……43
5.7 Causes of Vertical Handover……44
5.8 Problems in Vertical Handover……44
5.9 Vertical Handover Strategies……45
5.9.1 Dwelling Timer Strategy……45
5.9.2 Artificial Intelligence (AI) Strategy……45
5.9.3 Power Consumption Strategy……45
5.10 Proposed Solution……46
5.10.1 ALIVE Handover……46
5.10.2 Number of Handovers……47
5.10.3 Bandwidth Resources……48
5.10.4 Packet Delay……49
5.11 Simulation Results……49

CHAPTER 6: CONCLUSION

6.1 Conclusion……52
6.2 Future Work……53

REFERENCES……54

CHAPTER 1: INTRODUCTION

Communication is always necessary in building relations to mankind, when two persons meet they need some medium to interchange their views but due to distance barriers some tools are required to communicate each other. At the end of 19th century, recknowed scientist Graham Bell laid the first stone in the field of communication using different tools regardless of distance. He invented first wired base telephony equipment. It was the solution for the voice communication for the people how far apart they are. After this radio based communication systems Era started. It was an extension of wired based networks.

In the beginning it was developed for some special purposes like military and police usage. With the passage of time these systems emerged to allow common peoples to communicate with each other, rather then using wired based network. After this the age of faster communication and capabilities of voice get started and evolved into new telecommunication system [1, 2].

1.1 Evolution of Cellular Communication

During the 1980s mobile cellular network's age started, because the wireless communication has under gone different changes during the past 10 years, So its experienced enormous growth.

The **Figure 1.1** shows the evolution of the cellular networks. In this figure we have categorized the Cellular networks into five different parts. The first four are existing parts and the last one is the future part.

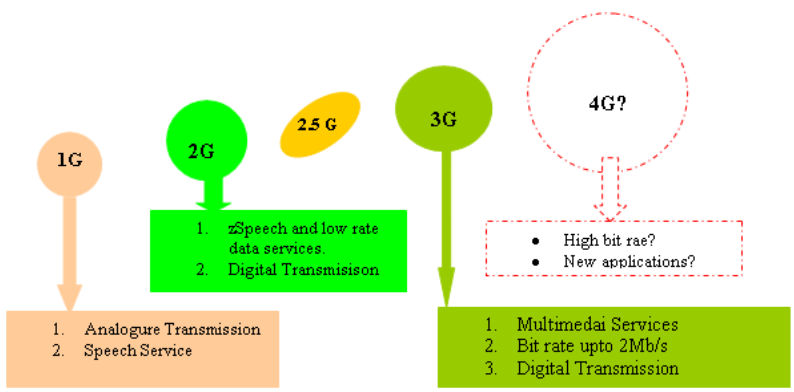

Figure 1.1: Evolution of Cellular Networks

1.1.1 First Generation (1G)

First Generation mobiles networks utilize analogue transmissions. In 1979 Nippun Telephone and Telegraph (NTT) in Japan introduces the first operational cellular networks. In North America AT&T introduces the First Generation mobile systems for the customer in 1980s. This system was named as Advanced Mobile Phone Service (AMPS). In First Generation the basic structure of Cellular communication is characterized and many problems were resolved regarding accomplishment of cellular network.

In First generation mobile networks the primary ambition was the voice chat. The above stated system was operational at 40 MHz bandwidth and 800 to 900 MHz Frequency. In 1988 this range was expended up to 10 MHz called expended spectrum in AMPS [3].

1.1.2 Second Generation (2G)

At the end of 1980s Second Generation (2G) mobile network system was launched. In this system the traditional voice services and low rate data service was provided. The foremost change in this system regarding the First Generation was the switching from analogue to digital transmission, so due to digital transmission better data services and spectrum efficiency was provided.

During Second Generation (2G) era the Global System for mobile communication (GSM) was developed in Europe. Using this system International roaming and seamless services was offered in Europe. In the beginning GSM operates at 900 MHz Frequency band with bandwidth of 50 MHz. Many more advancement was made in GSM during last two decades of previous century, due to these improvements GSM became 2.5 G cellular networks. GSM cellular network was implemented over 190 countries and have approximately 800 million subscribers.

In 1996 a new digital cellular system with additional services and supporting more data rate, called TDMA was put into practice. At the end of 20th century Second Generation (2G) cellular system was dominated, whoever it was evolving into a new generation called 3G due to increasing rate of mobile traffic.

The enhancement of GPRS in GSM enabled it to support relatively high data rate and sharing capacity between the different users. Theoretically General Packet Radio Services (GPRS) support 160 Kbps but practically it provides only 40 Kbps [3].

1.1.3 Third Generation (3G)

The unexpected success of Second Generation (2G) networks persuaded the Telecom Companies to explore more to fulfil the upcoming user requirement of larger data rate and Quality of Services (QoS). This strong driving force enabled the vendors as well as Telecom Companies to launch the new applications such as wireless internet and video telephony.

The **Figure 2.2** expresses the upcoming demands of users and services provided by the Telecom Companies.

The International Telecommunication Union (ITU) was already working to develop 3G networks. In 2000 International Mobile Telephony (IMT) was developed by ITU with the target of 3G in Europe with the following upcoming targets [3].

1. The mobile system should propose the same voice quality as PSTN.
2. The mobile system should sustain the high data rate in moving vehicles.
3. The mobile system should bear up to 2 Mb data rate in indoor location.
4. The mobile system should maintain the symmetrical and asymmetrical data transmission.
5. The mobile system should keep up the packet switched and circuit switched data [4].

1.1.4 Fourth Generation (4G)

The current standards of Telecommunication are driven to replace with 3G in upcoming years. This future cellular network is named as 4G. the objectives of 4G includes seamless communication with broad range connection with internet at any time anywhere and support of data, pictures and videos on internet.

The 4G network will consist of internet protocols such as to facilitate the subscribers by enabling the selection of every application and any environment. In 4G cellular networks a high bandwidth with high data rate is required, also in 4G a quicker and optimized strategy of handover is required to make the clear and reliable communication. The 4G network system will run with the cooperation of 2G and 3G and also will impart IP based wireless communication. The main target in 4G will be video streaming on IP based protocol, such as IP TV [4].

1.2 Emerging Technologies

In cellular mobile networks, there are two major issues data rate and mobility, bandwidth and coverage according to these two issues we can divide network technologies into two different technologies.

1. The technologies with low data rate and mobility.
2. Technologies with high data rate and bandwidth with small coverage.

According to these specifications in current age the technologies, WIMAX, WLAN, WIBRO, HSDPA and HSPA are offering high data rate mobility and coverage to both circuit switched networks and packet switched networks [5].

1.2.1 Wireless LAN

The Wireless Local Area Network (WLAN) is an unlicensed band of 802.11 ISM frequency band. 802.11 is one of the recent communication technologies of IEEE standard. It specifies medium access control (MAC) and physical layer that is why it is called Wireless LAN. It has three widely used types which operates on different frequency bands. These three types are 802.11a, 802.11b and 802.11g.

802.11a operates on 5 GHz frequency band and it gives the maximum data rate speed of 54 Mbps, which is higher than 802.11b because 802.11b operates on 2.4 GHz frequency band and give the maximum data rate speed of 11Mbps. 802.11b operates. 802.11g is recently developed standards of Wireless LAN. It also operates on 2.4 GHz frequency band and give the maximum data rate speed of 54 Mbps. In 802.11 Wireless LAN standards, the two types of MAC protocols Distributed Coordination Function (DCF) and Point Coordination Function (PCF) are used. Nowadays the most applications available in the markets are uses DCF because it is simple, robust and easy to implement.

DCF is the basic MAC layer function in Wireless LANs, Which used Carrier Sense Multiple Access technique (CSMA) also with an addition of Collision Avoidance of (CA). It resolves the CA problems of the packets transmitted at the same time [6].

1.2.2 WIMAX

The fiber optic transport services providing the high bandwidth and data rates is replaced by WIMAX wireless technology all across the world. WIMAX is emerging technology to fulfil the high data rate and QoS requirements of the customers, also it is the cheap deployment of voice services with no need of line of sight wireless channel.

WIMAX signals have the property to adopt the atmospheric conditions everywhere. WIMAX electromagnetic waves also offer the support of adoptive coding and different operation modes, so voice and data services can easily be transported by WIMAX network platform, [7].

1.2.3 Wireless Broadband (WiBro)

The Wireless Broadband is recently developed wireless technology offering high speed data service over internet. Actually it is newest technology developed by Korean research group often referred as (Next G) communication system. WiBro is capable to provide high data rate communication with diversity of QoS according to the demands of users over wireless channels.

In WiBro Orthogonal Frequency Division Multiple Access (OFDMA) is used according to IEEE 802.16a standard, to provide the services in Heterogeneous network system. Since different broadband services offer different amount of data rates according to different priorities (e.g. video streaming requires the high bandwidth, whereas voice services require higher priority).

Orthogonal Frequency Division Multiple Access (OFDMA) operates under the different conditions (e.g. as the requirements of users data rate are given when the sub carrier assignment and transmit power allocation occur), this problem is solved by non linear programming techniques in WiBro [8].

1.2.4 High Speed Downlink Packet Access (HSDPA)

High Speed Downlink Packet Access (HSDPA) is introduced in (3G) wireless network obtain high speed data rates. By implementing HSDPA some problems arisen to address the major business topics, one of these problems is radio. The transmission scheme designed for GPRS is upgraded by EDGE is also has limited features. The optimization of only radio is not enough; also transmission strategy should be designed to overcome these problems in every day growing traffic.

HSDPA is modified interface version of UMTS in 3GPP. It provides not only down link packet access but also it can be used for uplink data up to 14 Mbps per user [9].

1.2.5 High Speed Packet Access (HSPA)

It is revised the version of HSDPA. It also offers the high data rate for downlink as well as uplink 14 Mbps.

CHAPTER 2: WIRELESS LAN

2.1 Introduction

In Wireless Local Area Network (Wireless LAN) the user is facilitate with high bit rate connection because of wireless (Radio) connection. The range of wireless LAN is fairly short but it support high bit rate. In Wireless LAN, IEEE standards enumerate its different types and these IEEE standards also include the encryption algorithm (e.g. WEP) to make Wireless LAN more secure as compare to regular LAN, [10, 13].

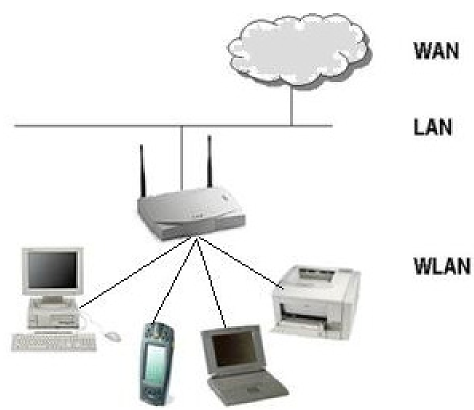

Figure 2.1 WLAN Access Points [13]

The **Figure 2.1** demonstrates the simple physical architecture of Wireless LAN. In Wireless LAN the wired network is connected to Access Point (AP) that grants wireless access through Network Interface Card (NIC) to clients, [13].

2.2 Architecture of Wireless LAN

Wireless Local Area Network instigate as an overlay to the Wired Local Area Network. Lightweight and Autonomous are two discrete architectures used in WLAN environment.

Each of the architectures has wide impact on wired LAN architecture. The selection of WLAN architecture is based on the consideration of building, future proof, integrated wired and Wireless LAN to accomplish high return on investment. Both architectures are popular but Lightweight architecture has plus advantages over the WLAN market [11].

2.2.1 Lightweight Model

Lightweight is the part of WLAN architecture. With most of wireless intelligence which residing at central controlling device, lightweight Wireless Access Point architecture have narrow functionality.

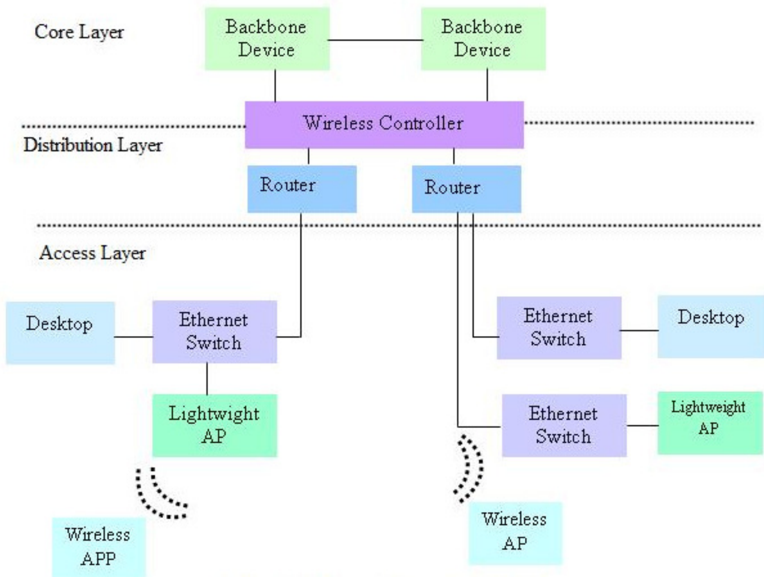

Figure 2.2 Lightweight Architecture Model [11]

Lightweight model is simple. The devices that provide the communication to the end user as Access Layer are identified by lightweight. Distribution layer provide the inter communication and the top layer (Core Layer) of Lightweight model is responsible fast and consistent data between networks.

Wireless Access Point (WAP) resides at the interface of access layer and provides the communication interface to end user. In lightweight architecture model, the management of operation is easy because it give the permission to WAP from single device, because the lightweight WAP have the knowledge of visibility and attentiveness of the neighbours WAPs. They can observe and if any one of their neighbours becomes the victim of fault it notifies the wireless controller.

Lightweight WAP may be Self-healing because to pay compensation for unsuccessful counterpart, controller commands the neighbouring WAP to regulate their power level, where as in autonomous there is no concept of the visibility of its WAP neighbouring and in this case to perform self healing it cannot adjust the power level.

If single WAP is busy or overloaded then in this situation wireless controller can relieve the wireless client to neighbouring WAP. In critical applications such as VoIP, self-healing and load balancing are important issues [11].

2.2.2 Autonomous Model

In Autonomous Model WAP is not mandatory as shown in **Figure 2.3**.

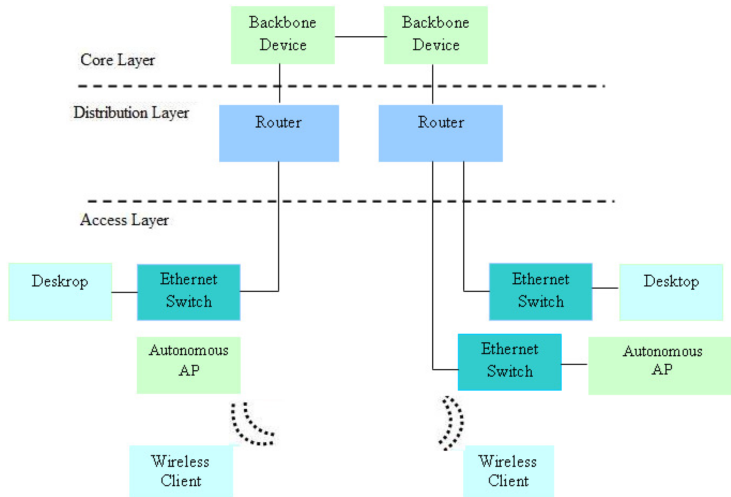

Figure 2.3 Autonomous Architecture Model [11]

Autonomous Wireless Access Point sustains the switching and strong security as well as networking function that are indispensable to route the wireless traffic. As in autonomous system there is no concept of the visibility of WAP so it cannot make the load balancing. Autonomous model cannot differentiate whether nearest WAP is part of WLAN infrastructure or illegal rouge WAP. The difference between the autonomous and lightweight is negligible. The difference is only this that lightweight have one extra component (WLAN controller) [11].

2.3 Wireless LAN Protocol Stack

In OSI Layer Model IEE 802.11 instigate on Data Link Layer and Physical Layer. The **Figure 2.4** illustrates the IEEE 802.11 Protocol Stack.

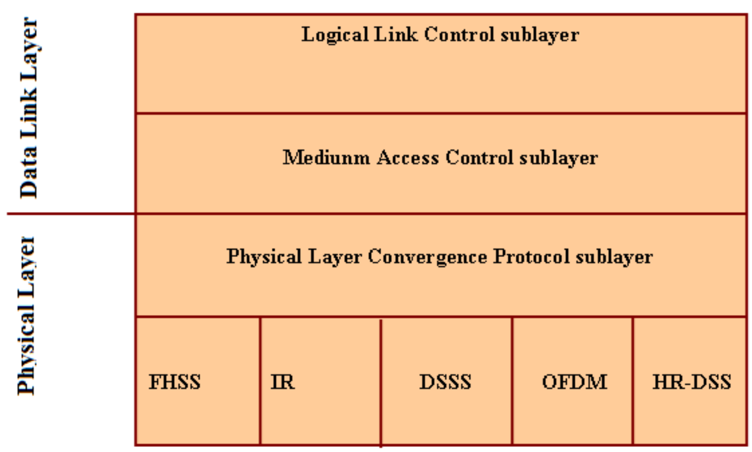

Figure 2.4: IEEE 802.11 Protocol Stack [37]

The IEEE 802.11 standard breaks up the Data Link Layer in to two sub layers.

- Logical Link Control (LLC)
- Medium Access Control (MAC)

Logical Link Control sub layer ensure that during interfacing with network layer 802.11 protocol use the standard format, it is also responsible to make transparent the underlying hardware and protocol with upper layer. 802.11 standards describe two types of operation for MAC sub layer i.e. Distributed Coordination Function (DFC) and Point Coordination Function (PCF). This layer is also makes sure the flaxen and systematic access to the wireless medium [38].

In Distributed Coordination Function (DCF) mode asynchronous data is transferred. To control access to the shared medium, DCF mode employs the Carrie Sense Multiple Access (CSMA) with Collision Avoidance (CA). Point Coordination Function is proposed for time bound services. In PCF mode access point behave as Point Coordinator and Polls connected to terminals. In this way to sustain time bound services and certain level of Quality of Services (QoS), the bandwidth can be allocated scientifically.

The IEEE 802.11 standard also breaks the Physical Layer in to two sub layers. To offer the common physical interface for MAC layer which is self-determining of transmission technology, the Physical Layer Convergence Protocol (PLCP) was intended. On the basis of infrared and radio transmission (FHSS and DSSS) only three transmission technologies were instigated, when first time IEEE 802.11 standard was introduced. Afterward IEEE 802.11a and 802.11b initiated supplementary transmission technologies, such as HR-DSSS and OFDM respectively [37].

2.4 Wireless LAN Components

The components of Wireless LAN are

- Basic Service Set (BSS)
- Extended Service Set (ESS)
- Distribution Service (DS)
- Mobile Node (MN)
- Access Point (AP)

2.4.1 Basic Service Set

In Basic Service Set (BSS) multiple stations can communicate with one another, because of electromagnetic waves circulation BSS does not refers to specific region. In BSS when there is no wired network and all the stations are mobile then BSS will become Independent Basic Service Set (IBSS). When AP enters in BSS then BSS will call Infrastructure BSS. In BSS when mobile stations communicate with each other than their communication will always held via AP. In this way double bandwidth will utilize as contrast to IBSS [17].

2.4.2 Extended Service Set (ESS)

Extended Service Set (ESS) is set of IBSS. In ESS the traffic is forwarding from one BSS to another when Access Points communicate among themselves. In ESS Access point perform communication through physical means, called Distribution System (DS). All the Mobile Stations in ESS are happen to be a MAC Layer network, where all the stations are fixed [17].

2.4.3 Distribution System (DS)

The Distributed System is physical medium through which Access points in their BSS communicate to exchange the frame for stations. These frames exchanged through physical mean [8].

2.4.4 Mobile Node (MN)

In Wireless LAN Mobile Node is the most essential component. Through wireless medium the MN communicate with other MN and to AP which is associated with wired network. MN may be PC or Note book that is equipped with wireless Network Interface Card (NIC) [17].

2.4.5 Access Point (AP)

In Wireless and wired network the AP is a transceiver that can transmit, store and receive the data. AP also works as bridge between wired and wireless networks. In the wired network the AP is connected with the server that offers the service to MN. In wireless networks the AP acts as Base Station (BS), that combines the wireless network with wired network [17].

2.5 Network Topologies of Wireless LAN

2.5.1 Ad-Hoc Model

Ad-Hoc mode also refers to as peer-to-peer communication between the mobile nodes (MN). This mode is suitable where data is needed to be exchange. The range of ad-mode is inadequate to the Mobile Node only. Ad-hoc mode has the low precedence than infrastructure mode [17].

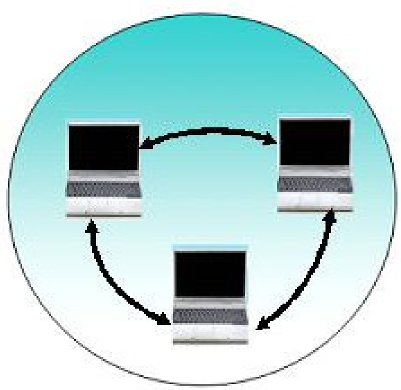

Figure 2.5 Ad-Hoc Mode [17]

2.5.2 Infrastructure Model

In Infrastructure mode Mobile Node and Access Point are two basic components. In Infrastructure mode Mobile Nodes connected to an Access Point, and AP can communicate with Mobile Node and server linked to wired network. In the same zone more then one AP can sustain the Mobile Node. In Infrastructure mode when one Mobile Node move across one AP to other AP then the roaming function must be awake for better QoS.

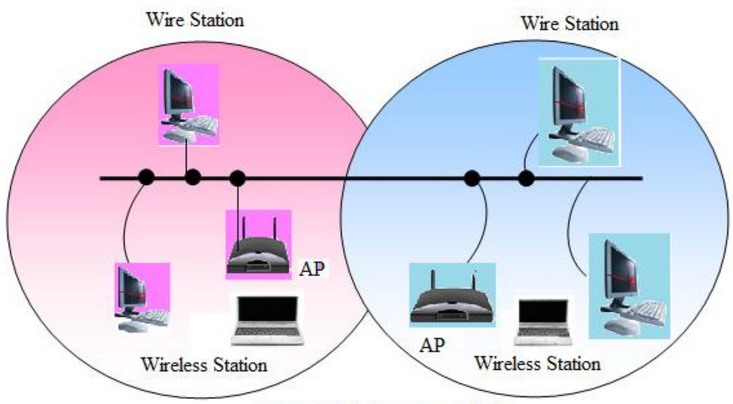

Figure 2.6 Infrasctructure Mode [17]

In case of roaming the, all AP desires the same authentication, key function as Extended Service set ID (ESSID) and Wired Encryption Protocol (WEP) while they operate on the equivalent channel [17].

2.6 Wireless LAN Standards

The standards of Wireless Local Area Network (WLAN) are developing gradually to get faster connection, and trying to get by with security and conflicting problems. The first standard of WLAN was introduced in 1997 and after this many other standards have been organized.

Table 2.1: WLAN Standards

Protocol	Author	Frequency	Modulation	Data Rate	Comments
802.11	IEEE	900 MHz	FHSS	-300 Kbps	Obsolescent
802.11b	IEEE	2.4 GHz, 900 MHz	DSSS FHSS legacy	1 – 11 Mbps	Most popular
802.11a	IEEE	5GHz UNII	OFDM	Up to 54 Mbps	Emerging
802.11h	IEEE	5GHz UNII	OFDM	Up to 54 Mbps	Adds Transmit Power Control freq. selection to 802.11a

HiperLAN	ETSI	5.15-5.30 GHz or 17.1 – 17.2 GHz	GMSK	23.529 Mbps	European Community-backed standards
HiperLAN/2	ETSI	5.15-5.30 GHz or 17.1 – 17.3 GHz	GMSK	54 Mbps	European Community-backed standards
Bluetooth	Bluetooth consortium	2.4GHz	FHSS	1 Mbps	Cable Replacement

2.6.1 IEEE 802.11

The development of WLAN began with the implementation of first IEEE 802.11 WLAN standards. The 802.11 standard have the utmost throughput up to 1 to 2 Mbits per second and operate in 2.4 GHz frequency. The 802.11 standard is based on radio technologies. WLAN intention was just to provide the wireless network infrastructure analogous to wired Ethernet network [12, 13].

2.6.2 IEEE 802.11b

IEEE 802.11b is most popular and organize standard as compare to 802.11, which was launched in 1999. IEEE 802.11b standard also operate in the same frequency 2.4MHz like 802.11 but the throughput rate was 11Mbits per second.

The term WiFi (Wireless Fidelity) was first introduce in this standard 802.11b, however later this term was changed to mean any type 802.11 network together with 802.11a, 802.11b dual band. The WiFi term was used to ease the uncertainty issues of WLAN interoperability [13] [14].

2.6.3 IEEE 802.11a and HiperLAN

This standard was bring out late in 1999 but in 2000 this standard was revised as an adjunct to 802.11. 802.11a standard operates in 5MHz frequency band instead of conventional 2.4 MHz. To supporting data rate up to 54 Mbps, this standard was used in ODFM (Orthogonal Frequency Division Multiplexing). The emergence of 802.11a and 802.11b is quite slow because these two standards are not companionable with each other. Proxim and Envara, Inc manufactures emerge the dual mode products that support 802.11a and 802.11b standards.

The 802.11a standard is still quite sparse technology although 802.11b emerge round about two year ago. The use of this standard was limited because in Europe 5MHz range permitted for use by reason of the overlapping of frequencies with the military channels.

Once again 5GHz technologies may become more common as 2.4 GHz technologies develop more common. One day 5 GHz can work much better then 2.4 GHz because it may be possible that 2.4 GHz frequency band become so congested by 4G and Bluetooth devices [12, 13].

2.6.4 HiperLAN

In August 2001, European Telecommunication Standard Institute (ETSI) standard for 5 GHz range was permitted, because in 2001 the use of 5 GHz technology has been scattering in Europe.

HiperLAN (High Performance Radio Local Area Network) is IEEE 802.11 standards. HiperLAN has already grown into two different standards, HiperLAN/1 and HiperLAN/2 respectively.

HiperLAN/1 throughput is 20Mbps where as HiperLAN/2 throughput is 54 Mbps. Both standards work on 5 GHz frequency band and cannot be replaceable with 802.11b standards because this standard requires total renovation of WLAN hardware [13].

2.6.5 IEEE 802.11g

This standard was scheduled for endorsement in the summer of 2003, this standard also operate on 2.4 GHz technology, that is compatible with wide spread WLAN-technology, 802.11b.The IEEE 802.11g standard promise for better security than its precursor. If the network has to be slow down in sequence of 802.11b client to understand the traffic, it will take long time before purchasing the expensive 802.11g [13, 15].

2.7 IEEE 802.11 Physical MAC Frame Format

In IEEE802.11 MAC frame format, each frame consists of following three components.

- MAC header
- A variable length frame body
- A frame check sequence (FCS)

MAC header involves the sequence control information, duration, address and frame control. Variable length frame body contain the precise information about the type of frame. Frame sequence check enclose 32 bit Cyclic Redundancy Check (CRC).

General frame format is shown below.

Octets 2	2	6	6	6	2	6	0-2313	4
Frame Control	Duration ID	Address 1	Address 2	Address 3	Sequence Control	Address 4	Frame Body	FCS

MAC Header

Figure 2.7: MAC Frame Format

The MAC frame format includes a set of field that arise in frame in fixed order. **Figure 2.4** illustrate the general MAC frame format. The fields address 2, address 3, address 4, frame body and sequence control are present in certain frame type. The length of “Duration ID” field is 2 bytes or 16 bits.

The length of duration in this field is range from 0 to 32667. The Network Allocation Vector (NAV) is update using the duration values. In MAC Frame format there are four “Address” fields. These four address fields designate the transmitting and receiving address, source and destination address. The length of “Sequence Control” field is 16 bits.

The sequence number and fragment number is also sub field of “Sequence Control” field. The length of “Frame Body” field is variable. This frame encloses the information explicit to individual frame type and subtype. The length of last “FCS” field is 32 bit. The calculation of FCS field is done above all the fields of MAC header and the fields of Frame Body [16].

2.7.1 Frame Control Field

The frame control consist of further sub fields as shown in **Figure 2.5**

B0 B1	B2 B3	B4 B7	B8	B9	B10	B11	B12	B13	B14	B15
Protocol Version	Type	Sub Type	To DS	From DS	More Frog	Retry	Power Mgt	More Data	WEP	Order
Bits: 2	2	4	1	1	1	1	1	1	1	1

Figure 2.8 Frame Control Field

The length of protocol version field is 2 bit. This field is constant in size. The protocol version for this standard is 0. All other values are reversed. Fundamental inappropriateness stays alive between the prior edition and new version when only the revision level will be implemented.

Both “type” and “subtype” field identify the frame function. The type field is 2 bit and sub type is 4 bit in length. The length of “To DS” field is 1 bit. This field is set 0 in all other frames. This comprises the frames of all data type sent by STAs, which is connected with an AP. The next field “from DS” is 1 bit in length. It is also set 0 in all other fields. The length of next “More Fragment” is 1 bit. It set to 1 in all management type frames but set 0 in all other frames.

The length of “Retry field” is 1 bit. It also set to 1 in any management type frame. To eliminate the duplication of frame the Receiving Station use this as aid indicator. The length of “More Data” field is 1 bit. This field is valid in management type frame, which is transmitted by an AP to STA in save mode. The length of “WEP” field is 1. if the information processed by WEP algorithm is present in frame body field then WEP field is set to 1. The length of last field “Order” is 1 bit. This field also set 0 in all other frames [16].

2.8 Security Issues in Wireless LAN

Above discussed Wireless LAN standards have numerous security drawbacks which have not been preset yet. The main reason of these drawbacks is the nature of communication which is diverse in Wireless LAN when it contrasts with customary physical medium. Regrettably many Network Administrators (NA) are still unaware about these drawbacks although these drawbacks have been under conversation for long time. In future standards many of these security flaws are optimistically going to repair [13].

2.8.1 Security Issues between Wireless/Wired Networks

Wireless LAN technology is more vulnerable to attacks as compared to traditional network because of its wireless communication. In Wireless ALN to tape somebody’s phone is much easier than conventional Ethernet network, because in Ethernet network, to gain access to traffic, the office has to be broken whereas in wireless LAN anyone can get by simply to get into the range of WLAN.

To eliminate this problem, the building should be isolated to stop Wireless LAN microwaves seeping out, but this process will be much pricey and tough.

As in Wireless LAN, to tape somebody's phone is easy so for this purposes numerous applications such as Airopeek (commercial wireless network traffic and protocol analyser) [18] have been developed.

Through Airopeek, even a new user, who don't have experience about this can easily monitor and confine the traffic on unencrypted network [19, 13].

2.8.2 The War of Driving and Chalking

A new tool Netstumbler [20] is used to monitor the WLAN to handle the new hacker culture evolved due to flaws mentioned above .The information about newly discovered WLAN is sent on the mapping system on the netstumbler by the users.

The WLAN data and location can be found easily by a laptop NIC or GPS of a car during driving by the netstumbler. This new type of hacking is named as war driving and is more effective. Approximately 70 WLAN access points were found during the war driving at Helsinki in Finland last year [13, 21].

2.8.3 Wired Equivalent Privacy Protocol Flaws

This protocol is unsecured because it uses the RC4 encryption algorithms which already have the security faults. For getting the password to access the network, different types of free software are available on internet to hack the WEP; so many parties prove this hack able protocol [22, 23].

This hacking based on RC4 encryption algorithms which have weak initiation vectors. When there will be enough packets because of traffic load then initiation vectors disclose the WEP encryption key characters, so in this way by accessing the encryption key hackers get access to the network.

In our discussion of security issues we assume that it is very rigid to install hacking program because these programs are not consistent in performance [13, 19].

2.8.4 Counter Measures to WLAN Security Flaws

In most of the cases it is a good approach to assume that all WLAN traffic is learnt by hackers. It makes users of WLAN technology to implement their own security solutions otherwise they may lose data confidentiality.

There are some 802.11b compatible equipments that use WEP but they avoid using weak initiation vectors that produce week packets on the network to make it vulnerable. It is a very easy way to enhance the security, but still there are flaws. The network is secure only if all the participants of the network don't produce weak initiation vectors, moreover it is not possible to stop a device from initiating weak packets. So this solution becomes a serious vulnerability.

On the other hand if a tunnel of VPN or SSH is used to encapsulate the WLAN traffic, the network becomes much secure. Tunnelled traffic doesn't provide any chance for man-in-middle attacks. It is very easy to implement this approach, a VPN server is installed right behind WLAN access point so that only the encrypted traffic is allowed to enter into the network.

Some problems in this solution are lack of awareness on the administrative level, cost and the installation of encryption servers. In addition denial of service problem may arise, and change of frequencies to avoid denial of service attacks is very hard [13].

CHAPTER 3: UMTS

3.1 Introduction

"UMTS (Universal Mobile Telecommunication System) is third generation (3G) mobile communications system being developed within the framework defined by ITU."

In order to provide high quality mobile communication at low cost, UMTS is used to accelerate convergence and integration between Telecommunication, Information Technology and service provider. UMTS support 2 Mbit data transfer rate per subscriber, facilitating, the deployment of mobile multimedia services such as downloading of MP3 audio and video streaming [24].

UMTS is continuously bringing the development of new techniques and wireless technologies around the world. These common developments need the common agreement towards the standardization. The main objective of this standardization is to confirm identical specification for different parts. The UMTS was specified to ensure equipment compatibility based on UTRAN standardization. 3GPP specifications are generally based on GSM specifications and generally know as UMTS system. [25, 26]

In this chapter we describe the UMTS technology. This chapter starts with small description of UMTS Technology such as its general architecture, protocol architecture, security architecture, future prospects, problems, services it provides and feasibility in the upcoming years in the vision of vertical handover. The chapter will be finalized with the brief introduction to overlay network and vertical handover which is main problem to solve the convergence scenario.

3.2 UMTS Architecture

UMTS system use radio interface and core network as GPRS. In UMTS new radio network is called UTRAN (UMTS Terrestrial Radio Access Network.) and connected through Iu interface to core network of GPRS.

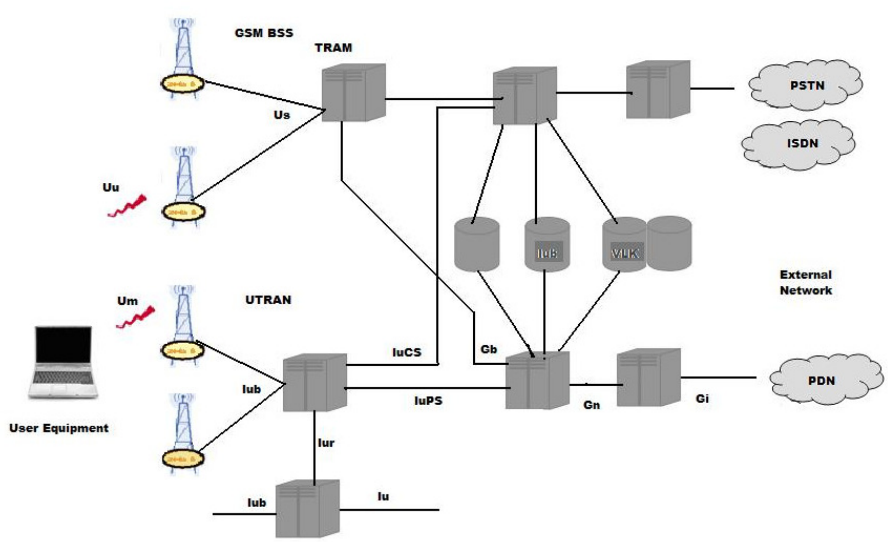

Figure 3.1 Fundamental Architecture of UMTS (Source: www. iec.org)

In UMTS system mobile terminal is called User Equipment. The User Equipment is directly connected to Node B interface. In GSM system the Node B is similar to BTS and normally works as cell. Other Node Bs are controlled by RNC through Iub interface. The circuit switch data is transferred via Iu-CS and packet base data is transferred via Iu-PS interface respectively.

In UTRAN Iur is new interface which connects two Radio Network Controllers but not same in GSM system. The Iur interface eliminates the Core Network burden and 100% facilitates the handling of Radio Resource management, [27].

3.3 UMTS Protocol Stack

In OSI model the UMTS is put into operation on three layers.

- Physical Layer
- Data Link Layer
- Network Layer

The UMTS protocol stack can be divided into

- Control Plane
  In control plane the control information's are exchanged.
- User Plane
  Actual data is broadcasted between the users in user plane.
- Management Plane
  In management plane the individual layers configuration is done.
  The UMTS protocol stack is illustrated in figure given below.

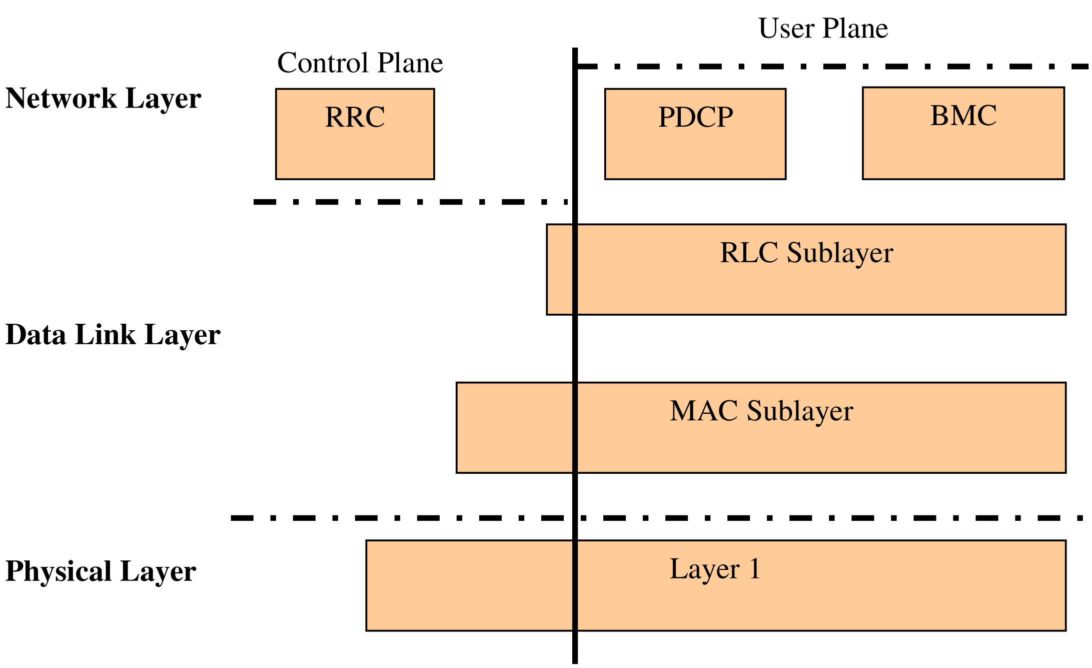

Figure 3.2: Protocol Stack of UMTS [37]

Radio data transmission interrelated tasks are switch at physical layer of UMTS protocol stack. The Medium Access Control (MAC) Sublayer launch the logical channels which are multiplexed to form transport channel through which data is transmit. The Radio link Control (RLC) uses the diverse modes of operation to handle different level of error control. This sublayer also fragments the packet for MAC sublayer. The Broadcast and Multicast (BMC) sublayer chiefly broadcast the message of cell and also propose the point to multi point services. During interfacing the upper to upper layers, the Packet Data Convergence Protocol (PDCP) sublayer checks whether UMTS protocol uses a standard format or not. PDCP sublayer also adjusts the packet in to correct UMTS format which are received from upper sublayers. The Radio Resource Control (RRC) sublayer is responsible for handover, location management and to broadcast of system information. This layer is situated in the control Plane in the Network Layer [37].

3.4 UMTS Domains

The general architecture of UMTS introduces two main domains.

- User equipment domain
- Infrastructure domain

The **Figure 3.2** shows the UMTS domains.

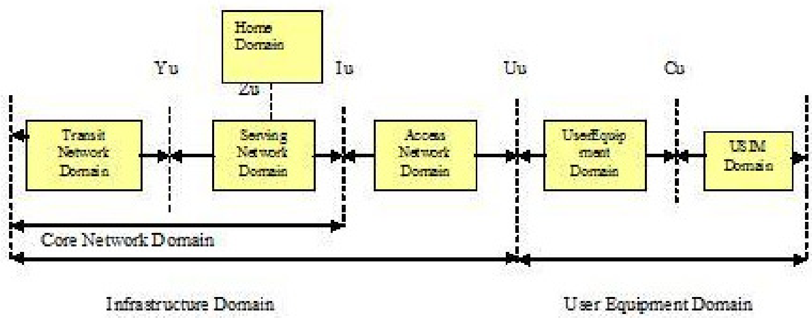

Figure 3.3 UMTS Domains And Reference Points [28]

User equipment domain is used to access the UMTS services from radio interface to infrastructure where as infrastructure domain consists of physical node and is used to fulfil the user's telecommunication service requirements. Second approach performs the required functions to terminate the radio interface [28].

3.5 UTRAN Air Interface

In UMTS system air interface is called UTRA (UMTS Terrestrial Radio Access). UTRA is CDMA (Code Division Multiple Access) based technology. CDMA is implemented in two different transmission modes to get efficient subscriber multiple accesses [26].

The first is UTRA Frequency Division Duplex W-CDMA and second is UTRA Time Division Duplex CDMA. The UTRA FDD mode uses the DS-CDMA (Wide-band Direct-Sequence Code Division Multiple Access) denoted by WCDMA. It utilizes a variable spreading factor and multi code link to get bit rate more then 2 Mbps. This mode supports highly user data rates by allocating

10 frames in which user data rate will remain same although change may occur from frame to frame depending on network control. This mode provides two fixed space frequencies, one for reception and other for transmission.

The second UTRA TDD mode is the combination of TDMA-FDMA. It uses the same frequency channels and operates in Time Division Duplexing. In this mode MSs access only FDM channel at specific time and also for specific time period. If mobile get one or more Time Slots (TS), it periodically access the set of TS throughout the frame duration. As in TDD physical channels are defined by code, one TS and second frequency, where as depending on demands uplink or downlink can be assigned to each TS. Flexible transmission can be obtained by using many TS of frame without additional resources from the hardware transceiver. Variable data rate can be obtain either through single code with variable spreading or through multi code transmission with fixed spreading.

In first case within the same TS one user or users may get different spreading codes while in second case spreading factors may change according to data rate [28].

3.6 UMTS Interface Types

3.6.1 Iu Interface

In UTRAN this interface is used to connect the Core network node with Radio Network Controllers.

3.6.2 IuPS Interface

In Iu interface IuPS (Iu Packet Switched) connects the RNC nodes with the SGSN.

3.6.3 IuCS Interface

In Iu interface (Iu Circuit Switched) is used to connect the RNC node with MSC/VLR.

3.6.4 Iub Interface

This interface is used to connect the RNC with Node B. In UTRAN this interface is used to combine the different protocol of NBAP over SAAL-UNI.

3.6.5 Iur Interface

This interface connects the RNC with other nodes. In URTAN Iur interface combines the SCCP and RNSAP, both are implemented in Boradband SS7 or SIGTRAN.

3.6.6 Uu Interface

The Uu interface makes the connection between the user terminal and RNC through Node B. This interface also supports the combination of Iub Framing Protocol, RRC and RLC/MAC [29].

3.7 UMTS Handover Techniques

The main objective of handover is to maintain the ongoing calls. This concept will be useful to understand the vertical handover between two different networks as proposed in this thesis. In convergence of two different networks, when mobile users moving across the different networks the internet-working provide the ubiquitous connectivity. The combination of these two technologies requires the location management algorithm and design of handover mechanism to keep continuity offered to user.

Mobile device should support the multiple wireless network interfaces in order to access the different technologies. The concept of convergence of heterogeneous networks is similar to architecture for so called 'Wireless Overlay Network'

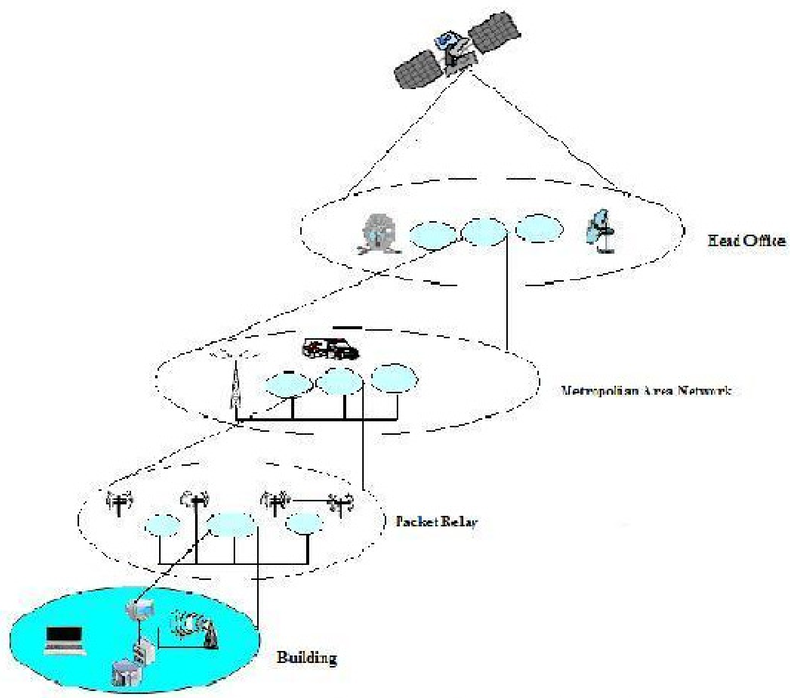

Figure 3.4 Fundamental Structure of Wireless Overlay Network [30]

Hierarchical structure is designed in wireless overlay networks consisting on overlapping cell with its characteristic (e.g. bandwidth, latency, coverage and capacity). In wireless overlay network low level provide the high bandwidth that cover small area and high level provide the lower bandwidth cover the larger area respectively. In term of coverage the **Figure 3.3** shows the wireless network standards and overlapping. By the convergence of network from wired to wireless increases the coverage of network and connectivity, [26].

3.7.1 Hard Handover

In hard handover the new radio links are accomplished when the old links are removed from the User Equipment. Hard handover technique may be same or different. Same hard handover is not recognizable by user, [31].

In hard handover different frequency band is allocated to each user. By establishing new connection at different frequencies, user may enter in new target cell by terminating the old connection. The hard handover change the frequency band between the UTRAN and UE connection. Each UMTS subscriber may have the opportunity to claim the extra spectrum to increase the capacity when usage level will be reached, during frequency allocation process for UMTS. In this situation one subscriber will use various bands nearly 5 MHz, [32].

3.7.2 Soft Handover

In soft handover when the User Equipment contain at least one radio link to UTRAN then links are added or removed. Soft handover technique is used when various radio links remain active at the same time. Basically soft handover performed when the cell operated on different frequencies, [31].

3.7.3 Softer Handover

In softer handover, the base station received two signals via different path. When the MS transmit the signal to BS (Base Station) then the signal will be received in two different sectors because of natural barriers and reflection of building. In downlink direction scrambling codes are used to separate the sectors, whereas in uplink direction the BS transmit the received signal to same receiver and then maximum combining techniques are included. In softer handover only one power control loop is remain active, [32].

3.8 WCDMA

"Wideband Code-Division Multiple Access (WCDMA) is the major technology in (3G) cellular system. This is radio access base technology".

In data communication, the basic concept is to allowing multiple transmitters to transmit information over single communication simultaneously. In CDMA coding scheme each user assigned a single and unique code. In this coding scheme allow several users to be multiplexed over the same physical channel. By contrast Frequency Division Multiple Access (FDMA) divides it by frequency whereas Time Division Multiple Access (TDMA) divides it by time.

In W-CDMA mode, channels (downlink and uplink) are managed in pair's differentiated by constant channel spacing called duplex spacing. High frequency is allocated in downlink and low frequency is allocated in uplink. Up to 2.8 Mbit/s data rate can be obtained depending on code rate, spreading factor and other parameters, [33].

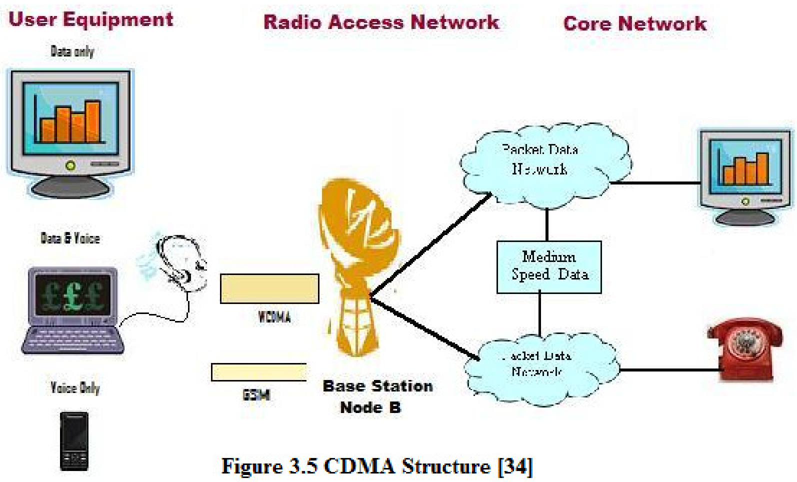

Figure 3.5 CDMA Structure [34]

This **Figure 3.5** shows the structure of WCDMA system. In WCDMA system communication devices (User Equipment) communicate with each other via Base Station Node B and to connect telephone, mobile telephone and internet through Core Network, [34].

3.8.1 WCDMA Physical Layer

Frequency Division Duplex (FDD) and Time Division Duplex are two basic modes of CDMA physical layer. Frequency, code and uplink by relative phase are the main characteristics of FDD mode where as in TDD mode time slot is additional property. Higher layer produced by data transport service via MAC sub-layer.

Physical layer has following two major techniques.

1. Direct-Sequence Code Division multiple Access (DS-CDMA) basically known as W-CDMA. DS-CDMA transmits the data in the range of 5 MHz bandwidth.
2. Time Division Multiple Access (TDMA) offered the additional slotted features. TDMA also known as TDMA/CDMA.

Above mention access techniques provide two transmission modes FDD associated to WCDMA operates in pair band, while TDD mode associated with TD/CDMA operates in unpaired band.

In WCDMA mode uplink and downlink transmission uses two different frequencies whereas in TDD mode uplink and downlink transmission uses the same radio frequency by using same time interval. Physical channel in TDD time slot divided in to two parts (reception and transmission).

The transmission process in FDD mode is same as in modulation. Physical channel in CDMA is referred to as code and the definition of physical channel is completed by the sequence of time slots.

UTRA families have the following codes,

- Channelization codes: This code is used to separate the channel from same source and codes.
- Gold code: This is 10ms period code, used in FDD mode with its original code having

length $2^{18} – 1$ chip and in TDD mode the scrambling code is use having length 16 [28].

3.8.1.1 Dedicated Transport Channel

In FDD and TDD mode, there is only one basic transport Dedicated Channel (DCH) for uplink and downlink. DCH manage the information between User Equipment and UTRAN. DCH transfer the information using antennas over the part of cell or whole cell [28].

3.8.1.2 Common Transport Channel

FDD and TDD have some common transport channel, while TDD has no Common Packet Channel (CPCH) and FDD have no Uplink Shared Channel (USCH). In FDD mode CPCH channel have some important power control commands but may be these commands have no importance in TDD mode and vice versa [28].

3.8.1.3 FDD Physical Channel Configuration

In FDD physical channels are inherit form the radio frame and TS layer structure.

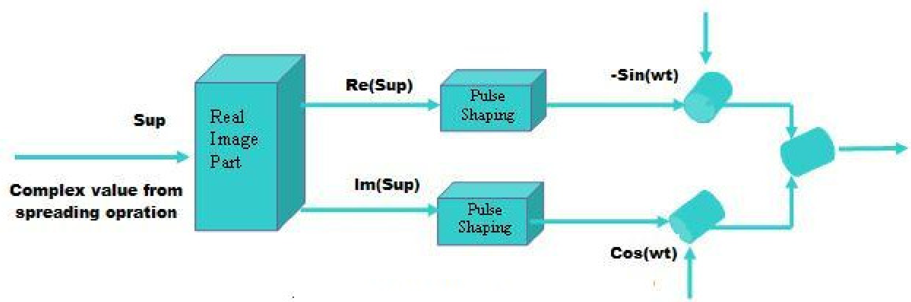

Figure 3.6 Modulation Process [28]

Processing unit of radio frame consist of 15 slots having length 38400 chips and TS base on fields having length 2560 chips. TS configuration depends on physical channel bit rate, so for different physical channel per slot number of bits might be different [28].

3.8.1.4 Up/Down Link Modulation Process

Uplink and Downlink modulation both uses the 3.84 Mcps chip rate with complex valued created by spreading process. **Figure 3.2** shows the uplink and downlink modulation process [28].

3.8.1.5 Dedicated Uplink Physical Channel

There are two types of dedicated physical channel, Dedicated Physical Control Channel (DPCCH) and Dedicated Physical Data Channel (DPDCH). Both channels are multiplexed in each radio frame and performed different functionality. The uplink DPDCH support the DCH transport channels where DPCCH handle the Layer 1 control information also know pilot bits to support the Transport Power Control command (TPC), feedback information (FBI). DPCCH also support the Transport Format Combination Indicator (TFCI) but it is an optional.

Each radio link have only one uplink DPCCH, on other hand each radio link can have more than one uplink DPDCH.

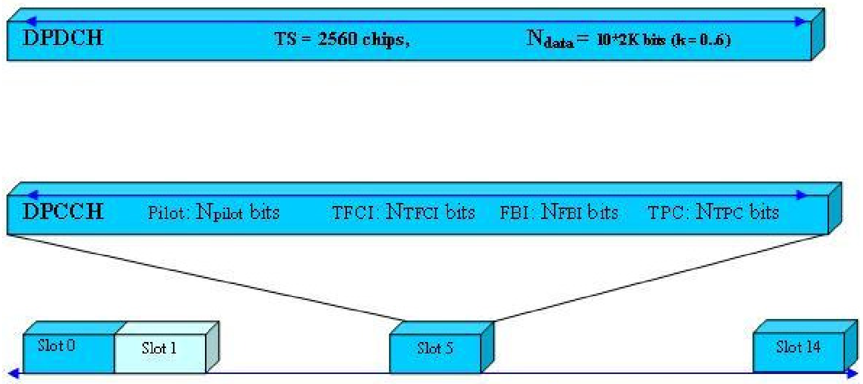

Figure 3.7 Fundamental Structure of DPDCH and DPCCH [28]

The **Figure 3.7** shows the structure of dedicated uplink physical channel where each frame associated to power control period has length of 10 ms that divided into 15 TS of 2560 chips.

There are two types of uplink dedicated physical channel, one have TFCI and second do not have TFCI. In the uplink it is compulsory for all User Equipment to support the use of TFCI [28].

3.8.1.6 Spreading DPCCH and DPDCH

DPCCH and DPDCH spreading principle have the binary values in the combination of ‘0’ and ‘1’ respectively. We can transfer more than six DPDCH and one DPCCH channel. Channelization codes Cc and Cd are used to spread DPCCH and DPDCH at chip rate [28].

3.8.1.7 Common Uplink Physical Channel

ALOHA technique is used in random access transmission. In the starting of number of time intervals known as access slots, User Equipment could start the random access transmission.

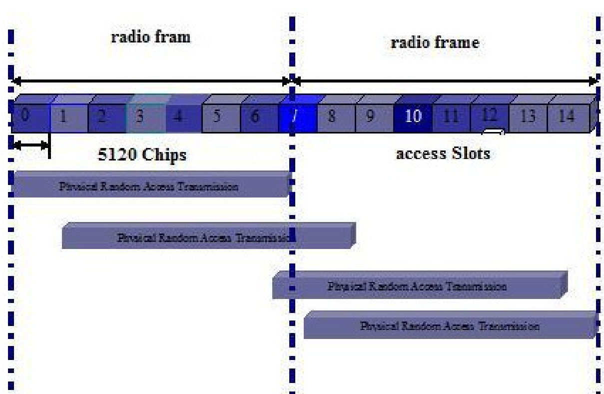

Figure 3.8 RACH Slots and Spacing [28]

The **Figure 3.8** show the 15 access slots divided in to two frames having the space 5120 chips respectively. For random access transmission available access slots information comes from upper layer, [28]

3.9 UMTS Services

UMTS offer bearer services and teleservices (e.g. speech or SMS) to provide the capability for transfer of information between two different access point. We can negotiate and renegotiate the characteristics of bearer services during ongoing session or connection. For maximum transfer delay, variation delay and bit error rate bearer services offer several Qualities of Service parameters, [31].

3.9.1 Services Classes

UMTS offer different types of QoS classes.

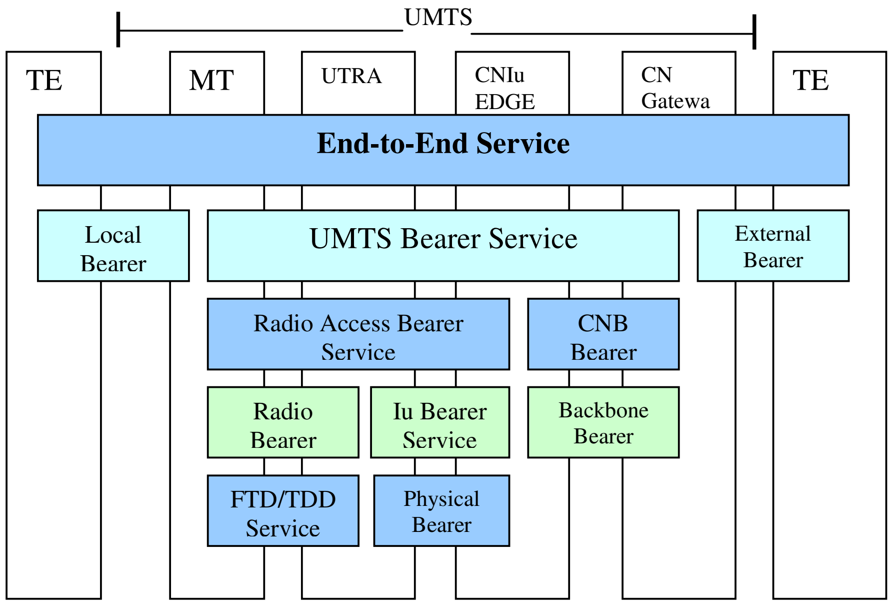

Figure 3.9: Architecture of QoS [31]

As we know that the Network Services belongs from one Terminal Equipment to other Terminal Equipment or End-to-End Services. These end-to-end services provide different types of QoS to the network users and then it depend on user whether he is satisfied with these services or not.

All the features in Bearer services enable the QoS. In **Figure 3.8** each layer performs its individual's services, [31].

3.9.1.1 Conventional Class

Conventional class is very sensitive in delay variation and this class offers several services for example video games, audio and video telephony etc, [26].

3.9.1.2 Streaming Class

The main objective of streaming class is that different information such as audio and video streaming data transmitted at the same time, [26].

3.9.1.3 Interactive Class

In interactive class data integrity is much important then delay variation, [26]. This class also offers the different services such as database access, web browsing and network games, [31].

3.9.1.4 Background Class

In back ground class data integrity is also very important like Interactive class. There is no specific delay variation background class, [26].

3.10 UMTS Future Perspectives

UMTS switch the user into new information society. It allow user to transfer audio, video and graphical information and provide the access to next generation information based services. It moves the mobile users forward form 2nd-generation to 3rd generation that delivers the mass market and low cost communication services.

UMTS is broad band multimedia system that will support all wireless and wired network technology and also have the capability to support new application whether they are common in both network or unique to UMTS. UMTS may be derived or emerge from other information or telecommunication technologies. The most important aspects of UMTS are bandwidth on demand, access to wide-band application, mixed traffic type and efficient transport network. In this manner the UMTS is consider the demand of 21st century [35].

3.10.1 Liberalization Polices of European Union

Liberalization policies of European Union will enable the mobile subscriber to offer fixed network services and vice versa. In this situation UMTS technology will becomes essential to ensure that mobile subscriber can compete in competitive telecommunication environment. Liberalization polices will change the current mobile market. They will encourage the European wide business and multi service provider that will allow the customer to choose between wired or wireless supported applications, [35].

3.10.2 Social Aspects

More travel, increasing purchasing power, irregular working experience and rural migration, etc. all these social demands are well established in UTMS.

UMTS will encourage higher service usage through user-friendliness, when the customer will demand better service principles and methods that are not distinguished between the access methods (wireless or wired) [35].

3.10.3 Security Matter for Personal Communication Technologies

The main purpose to study the security matter for personal communication technologies is to check the compatibility and feasibility of new and advanced security features based on trials and demonstration. Integration and compatibility of new security system and system performance issues are being implemented in UMTS. Investigation, implementation and testing are heading in the following areas of UMTS.

- Implementation of new security features from existing mobile system to UMTS.
- Fraud detection and management in UMTS.
- Security of billing in UMTS [36].

3.11 Interworking Requirements

Here Interworking Requirements concisely describes the several requirements for interworking UMTS and Wireless LAN network.

3.11.1 Interworking Model

Interworking Model demonstrated in **Figure 3.9** describes the interworking notations.

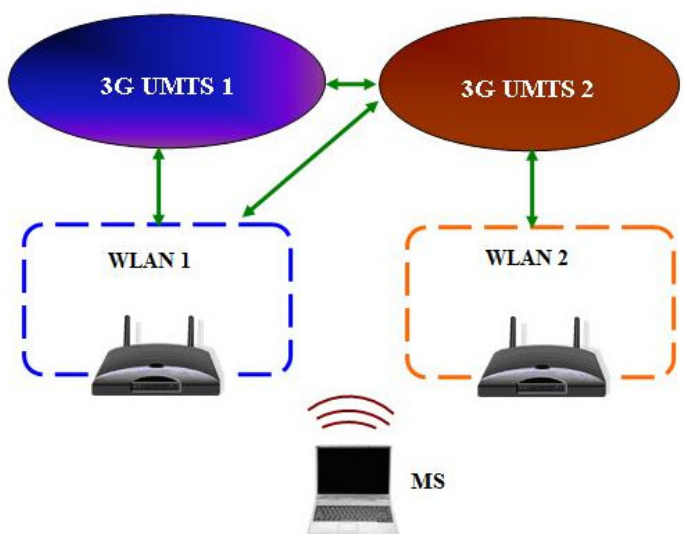

Figure 3.10 UMTS-WLANInterworking Model [37]

In **Figure 3.10** the green arrows demonstrate the direct roaming contract and they permit and support the interworking. In **Figure 3.9** WLAN1 have direct roaming with UMTS1 and UMTS2 respectively, where as WLAN2 has direct roaming only with UMTS2. UMTS2 have indirect roaming with WLAN1 whereas UMTS1 and UMTS2 have roaming contract with each other. In **Figure 3.9** MS have contribution with UMTS and set with WLAN and UMTS apparatus.

On the basis of available signal strength and cost of data transfer, the MS decides that which access network to be connected [37, 39].

3.11.2 Interoperability

For different operating systems, on different platform, over different networks interoperability condition is essential. To allow seamless communication across dissimilar architecture, interoperability manages all the essential translation.

3.11.3 User Requirement

For presenting more services to customer by interworking of WLAN and 3G networks, dissimilar architectures are better suited for diverse application domains.

Novel concepts demonstrate the several user requirements [40]. To understand the novel concept we define a theoretical user A that subscribe network A service provider. Application A is supported by network A, while running on device A. Network, user application and device B are also described in the same manner. Common mobility requirements of interworking of network A and B can be acknowledged as “To communicate within same network or dissimilar networks, the customer A may run application A or B, on device A or B, in network A or B respectively” [37].

CHAPTER 4: VERTICAL HANDOVER TECHNIQUES

4.1 Introduction

As we know the popularity of mobile computing is increasing day by day and more mobile hosts are connected with the interfaces of multiple networks, which have the ability to connect with internet. In this situation one major problem is that how to select the best network interface at that time. The decision to choose the best network interface should be based on different factors, such as 'power consumption of each network, the capacity of each network link and the battery status of mobile'. To choose the best time and interface for vertical handover, cost factor is also considered. To calculate the cost we used the logarithmic function but these logarithmic functions will have some problems to represent the cost value because the connection is free of charge, [41, 42].

In this chapter we will describe the Comparison of Vertical Handover Techniques in available network interfaces. By using appropriate technologies, we can suggest the best handover model to network interface at best moments according to available properties of network interface and system configuration. The implementation of vertical handover model is based on Universal Seamless Handover Architecture (USHA), which is practical and simple solution [41, 43].

To access multiple wireless networks in heterogeneous wireless network, the mobile station or mobile devices will equipped with different network interfaces. These mobile devices provide the flexible network access and connectivity to the users but to support different networks it create the stimulating problems. The process through which user maintain his call without any interruption, when he moves across one network to another network is referred to as handoff or handover process

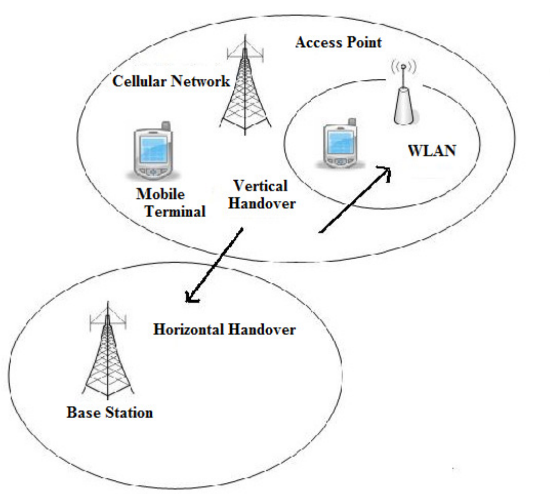

Figure 4.1 Vertical and Horizontal Handover in Hetrogeneous Network [45]

The process that is considered between the wireless networks having the same access technology is referred to as horizontal handover process. This handover technique is useless because of complexity when heterogeneous wireless networks overlapped [44]. In this situation new handover technique between networks having different access technology will be used and normally referred to as Vertical Handover Process [44, 45].

4.2 Handover Initiation Techniques

On the bases of Received Signal Strength (RSS) from current and neighbouring Base Station (BS), it is determined that when to request the handover. **Figure 4.2** illustrated that as a result of signal propagation characteristic, when the Mobile Station (MS) move away from Base Station (BS1) its signal strength become weaker whereas its signal strength become stronger as the MS get closer to Base Station (BS2). By removing temporary geographical and environmental factors and by using averaging window we can find the averaged received signal over time.

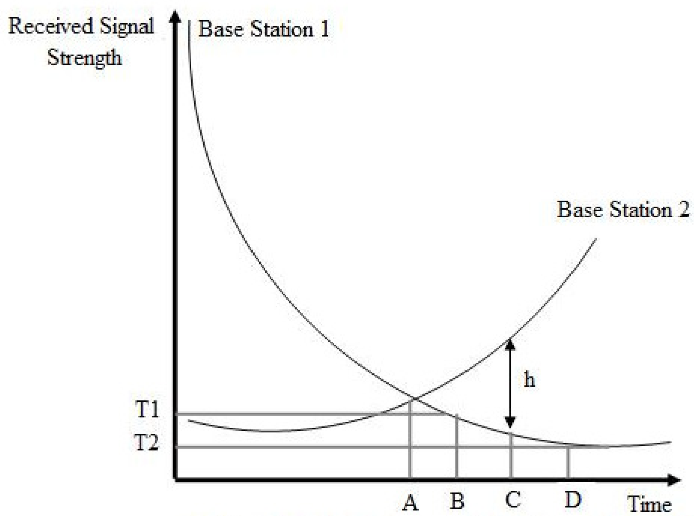

Figure 4.2: MS movement in Handover Mode [53]

Here we also briefly discuss four different handover initiation techniques.

- Relative Signal Strength
- Relative Signal Strength with Threshold
- Relative Signal Strength with Hysteresis
- Relative Signal Strength with Hysteresis and Threshold [51,52]

4.2.1 Relative Signal Strength

The **Figure 4.2** describes that Base Station that have strong signal strength is preferred to handover, because Received Signal Strength (RSSs) is measured over time in relative signal strength. **Figure 4.2** show that handover is requested at point A when the Received Signal Strength (RSS) of Base Station 1 is decreased by Received Signal Strength (RSS) of Base Station 2. Unnecessary number of handover knows as ping-pong effect may be demanded due to signal instability. Therefore to reduce the network load unnecessary handover should be avoided by using handover techniques [53].

4.2.2 Relative Signal Strength with Threshold

To eliminate the ping-pong affects the threshold value T is introduced with Relative Signal Strength as shown in above mentioned **Figure 4.2**. When the Received Signal Strength (RSS) of Base

Station 2 is stronger than Base Station 2 and RSS of Base Station 1 is less then Threshold T then the handover is initiated [53].

4.2.3 Relative Signal Strength with Hysteresis

To initiate handover, Relative Signal Strength with Hysteresis introduces a value h at point C as shown in **Figure 4.2**. Handover is occurred when the Received Signal Strength (RSS) of Base Station 2 is increased by the Base Station 1 Received Signal Strength (RSS) [53].

4.2.4 Relative Signal Strength with Threshold and Hysteresis

As we mentioned above that handover is occurred when the RSS of Base Station 1 is less then T1 and RSS of Base Station 2 is greater than the hysteresis value h of Base Station 1 at point C. The handover would be at point C if we select threshold less then T1 but higher than T2. For minimum number of handover concept, Received Signal Strength technique combines the threshold and hysteresis values [53].

4.3 Fundamental Structure of USHA

Universal Seamless Handover Architecture (USHA) proposed in [46], to supports the both handover techniques (Horizontal and Vertical Handover) with smaller change in its infrastructure. USHA get the seamless handover process instead of using new transport protocol or new session layer by middleware design strategy [47]. USHA also works on upper layer.

USHA occurs only on overlaid networks with various internet access methods called soft handover. When the handoff process occur then soft handover awake the target network interface without any delay. USHA may lose connectivity to upper layer application, if the coverage from multiple access methods fails to overlap.

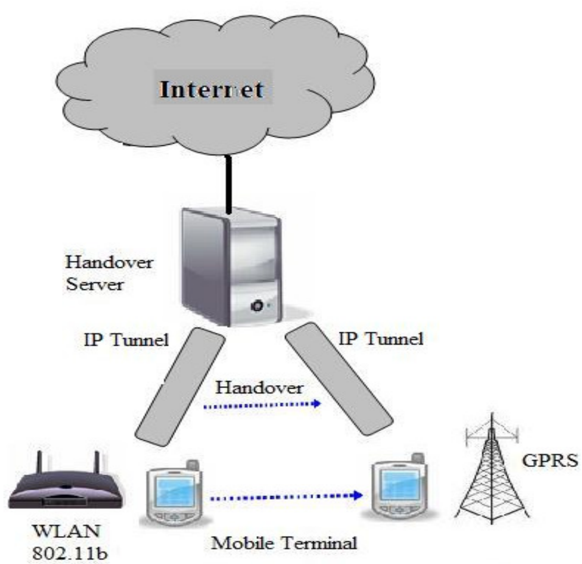

Figure 4.3 Fundamental Structure of USHA [43]

In **Figure 4.3** the USHA implementation is based on IP Tunnel technique. In USHA, the Mobile Terminal is at one end of IP Tunnel and Handover Server is on the other hand. IP tunnel is established among every Mobile Terminal and Handover Server, so the communications of all application layer are restricted to tunnel interface instead of physical interface. All data packets are encapsulated that's communicate through IP tunnel and transfer through UDP protocol.

IP tunnel use two types of IP Address, one type is fixed IP addresses which are mandatory for Mobile Terminal to establish the physical connection with Handover server whereas the second type is Virtual IP address. When the physical connection from Mobile Terminal to Handover server is change then handover process occur and in this case it is the responsibility of Mobile Terminal to automatically switch in new interface from underlying physical connection of virtual tunnel. Handover server suddenly updates its IP tunnel setting on the handover notification, so that data packets should be transmitted to new physical link of Mobile terminal. After the handover process there is no need to reset the tunnel because all the data packets are encapsulated and transmitted through UDP protocols [43].

4.4 Smart Decision Model

In Vertical handover the Smart Decision Model (SDM) is used for reliable configuration. In **Figure 4.4** the Handover Control Centre (HCC) describes the four components i.e. Device Monitor (DM), System Monitor (SM), Smart Decision (SD) and Handover Executer (HE).

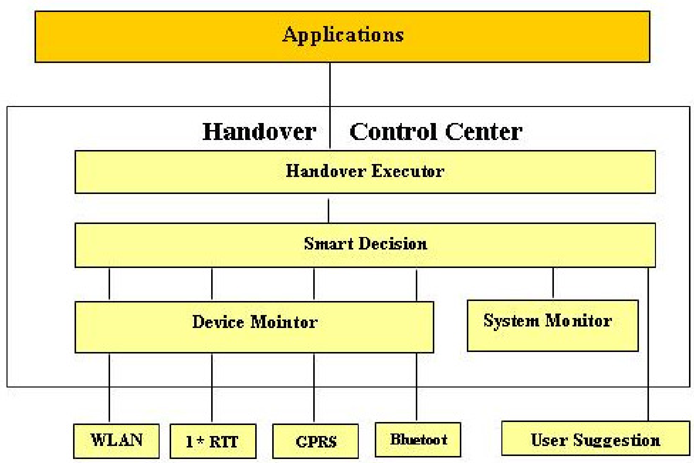

Figure 4.4 Supporting Smart Decision Model [41]

HCC makes the connection between upper layer applications and network interface. The responsibility of DM is to check and reporting about the status of each network interface like signal strength, link capacity and power consumption of each interface. SM is responsible for system information. SD gathers the user's preferences and all other available information to achieve the Smart Decision to choose the best network interface at that time. If the current network interface is different form best network interface then HE perform the Handover process [41].

4.4.1 Smart Decision Model Process

4.4.1.1 Normal phase

- Collect the information from DM on each wireless interface in the subscriber list.
- Get the status of current system from SM component.
- To obtain the score of each wireless interface from subscriber list use the score function.

4.4.1.2 Priority Phase

- Add the available interfaces in the subscriber list.
- Delete the user specified devices from the subscriber list.
- If subscriber list is empty then removed the devices from the step 1.

To manage the user specific preferences according to the usage of network interface, the normal and priority phase is compulsory in SD. To calculate the score of each wireless interface the SD also provide the score function. To calculate the score, suppose there are n factors and the final score of interface □ will be the sum n function. Here we will use the score function.

$$S_i = \sum_{J=1}^{n} w_{j,} f_{j,i}$$

Where

$$0 < S_i < 1$$

$$S_i = \sum_{J=1}^{n} w_j = 1 \longrightarrow \textbf{(1)}$$

In equation (1) wj stand for the weight of factor n and fj, i show the score of interface *i* of factor *n*. Further we divide the score function in to three parts, where each accounts of usage expense (E), power consumption (P) and link capacity (C). In this case equation (1) will become,

$$S_i = W_a f_{a,i} + W_b f_{b,i} + W_c f_{c,i} \longrightarrow \textbf{(2)}$$

Moreover there is the similar function for every $\mathbf{f_{a,\,i},\ f_{b,\,i}\ f_{c,\,i}}$ and the functions range is restricted from 0 to 1. The function will be as follows,

$$f_{a,i} = \frac{1}{e^{\alpha i}}, \quad f_{b,i} = \frac{e^{\beta}}{e^{M}}, \quad f_{c,i} = \frac{1}{e^{\gamma}} \longrightarrow \textbf{(3)}$$

Where

$$\alpha_i \geq 0, M \geq \beta_{i,} \geq 0 \text{ and } \gamma_i \geq 0$$

The coefficients of α_i, β_i, $\gamma\ i$ can be obtained through will-turned function. To restrict the result between 0 and 1 we use the inverse exponential equation for $\mathbf{f}_{a,i}$ **and** $\mathbf{f}_{b,i}$. To simplify the function new term M is introduce as denominator in $\mathbf{f}_{c,i}$, where M is the maximum bandwidth requested by the user [41].

4.5 Technical Features of VHO

Figure 4.5 show the Technical feature of Vertical handover. **Figure 4.5** describes three main categories.

- Mobility Engineering
- Resource Management
- Service Management

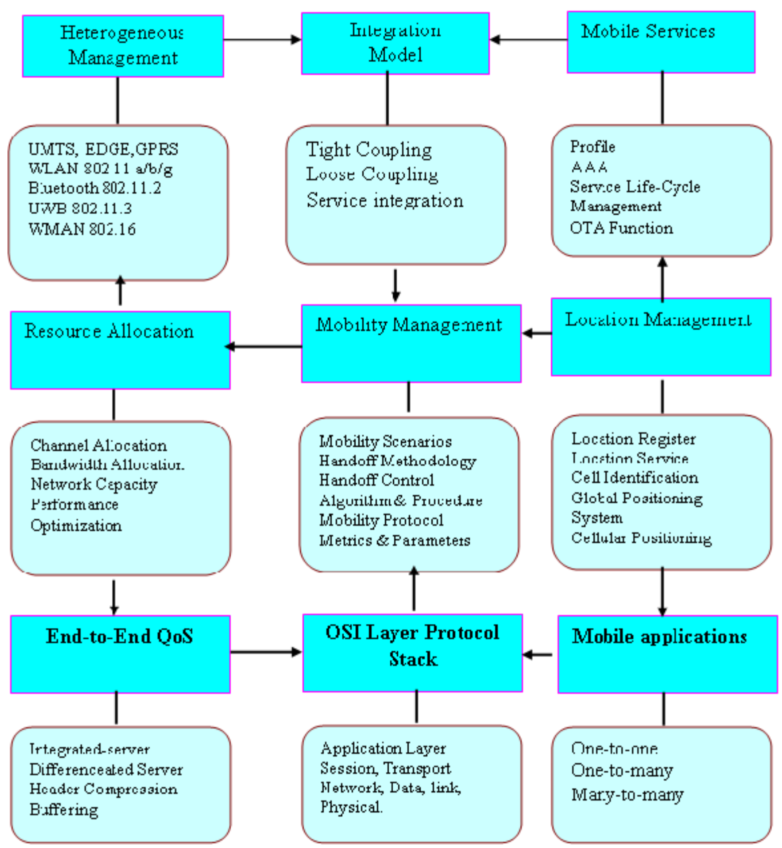

Figure 4.5 Architecture of Vertical Mobility [49]

Resource management consist of two main parts i.e. direct and indirect resource allocation in heterogeneous wireless networks. Direct resource allocation referred to as channel and bandwidth allocation where as indirect resource allocation referred to as network capacity and performance optimization via different ways. QoS directly based on resource allocation whereas end-to-end QoS needs other managements such as packet's priority in router using header compression on wireless network and packet's buffering in routers and terminal.

Mobility Engineering composes heterogeneous networks and services. Mobility engineering offers different services such as mobility management, design and implementation of multiple protocols middleware solution in OSI protocol stack layer [48, 49].

Service management offers the interactive mobile applications, location management, mobile services and service life cycle via "OTA" functions. OTA function is used for upgrading and downloading the services.

4.6 Handover Techniques

4.6.1 Horizontal Handover

In Horizontal handover the users use the same network access technology and mobility perform on the same layers. In horizontal handover the on-going calls are to be maintain and although the change of IP address because of the mobile nod movement [55].

4.6.2 Vertical Handover

In vertical handover the user can move between different network access technologies. In vertical handover the mobility perform between the different layers. In vertical handover the mobile node moves across the different heterogeneous networks and not only changes the IP address but also change the network interface, QoS characteristics etc [55].

Table 4.1: Difference between Vertical/Horizontal Handover

	Vertical Handover	**Horizontal Handover**
Access Technology	Changed	Not changed
QoS Parameters	May be hanged	Not changed
IP Address	Changed	Changed
Network Interface	May be change	Not Changed
Network Connection	More than on connections	Single connection.

4.6.3 Downward and Upward Vertical Handover

When user move form network with lower cell size and higher bandwidth to network with larger cell size and usually lower bandwidth is called downward-vertical handover, for example WPAN to PAN. On the other, handover that is performed with higher cell size and usually lower bandwidth is called upward-vertical handover [26].

4.6.4 Microcellular Handover

This handover technique is mostly used in populated areas to meet high system capacity by reuse of frequency.

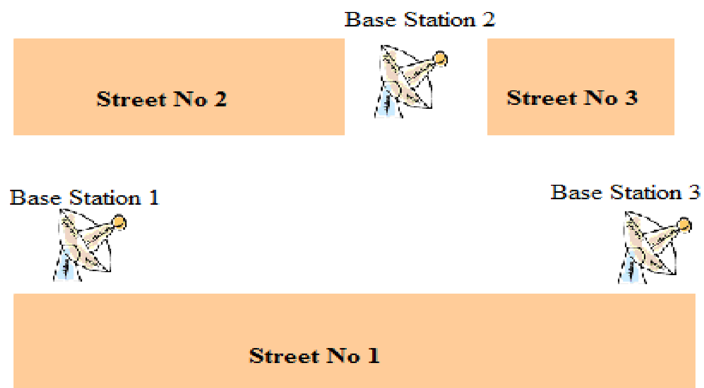

Figure 4.6: Base Stations Deployed in Streets [13]

Figure 4.6 shows that there are three Base Stations in three streets. The Base Station 1 and Base Station 3 have line-of-sight (LOS) where as Base Station 2 and Base Station 1 has no-line-of-sight (NLOS). Therefore we can say that there is LOS handover between Base Station 1 and Base Station 3 whereas between Base Station 2 and Base Station 1 there is NLOS handover.

When the Mobile Station misplace the LOS because of turning the corner with his current Base Station in NLOS then Received Signal Strength reduced. This RSS reducing effect called the corner effect. In this situation fast handover algorithms are requires to avoid from call dropping because RSS drop quickly due to corner effect. LOS attempts to decrease the unnecessary handover between the Base Stations whereas NLOS must be as speedily as possible because of corner effects [53].

4.6.5 Multilayer Handover

In multilayer handover the microcells are superimposed with macrocell to decrease the number of handover and to raise the system capacity. For GSM900 the microcell and macrocell have area range from 500 meters to 35 Km [54]. In multilayer handover according to speed, users are consigned with each layer. To decrease the number of handover microcell layer is allotted to slow user where as macrocell allotted to fast user. When microcell becomes congested then in this situation macrocell not only work for fast user but also work for slow users. Handover calls are pour out to macrocell when the microcell layer distributes all of it channels to slow users. When the load in microcell decreases then it is feasible for microcell to allocate channels to new user. This sort of handover is knows as take-back [53].

4.7 Limitations of Vertical Handover

There are some limitations of vertical handover, e.g. it handles all the connections in same manner. When all TCP/IP connection automatically transfers from one interface to another, in this situation only one wireless interface (the best one) is used at that moment. The term used ‘the best one’ normally concern with end user specific application. In most cases it use different techniques for multiple connections and it may also suitable for finer grained approach (‘this approach refers to sequential instruction for stream execution in parallel on asynchronous multiprocessor’).

The second limitation of vertical handover is that vertical handover need the same network interface. All the wireless interfaces must be used as part of the same Mobile IP and DNS infrastructure because mobile nodes and peers must be able to reach the Mobile IP and DNS server.

Because of these two limitations vertical handover cannot bring together the ad-hoc technologies, such as ad-hoc 802.11b, IrDA and Bluetooth. The ad-hoc networks contain some nodes that may not be the part of direct peer to peer infrastructure. This means that, because of peer to peer connections we are missing the very important part of wireless diversity. Usually the peer to peer connections are most efficient because some time they offer the shortcuts for slow and expensive infrastructure, [51].

CHAPTER 5: VERTICAL HANDOVER IN WLAN

5.1 Introduction

The exploitation of wide-area wireless network such as 3G and GPRS and the growing esteem of WiFi (802.11b based Wireless LAN) show the strapping expansion of Mobile Internet. Various types of mobile campaign such as Wireless LAN-GPRS pcmcia cards are becoming inexpensive due to which hand held devices (e.g. laptops, PDAs) are ready to connect with dissimilar networks.
Basically Wireless networks diverge in medium access layer, physical layer and link-layer mechanism. To meet diverse wireless medium various methods are used.

The cellular networks use the complicated signal processing, channel evaluation techniques to manage the harsh-outdoor mobile atmosphere. Through deep fading and handover process, the cellular link endure from variable and high round trip time, burst losses and link outages because of net effect. Thus the end user familiarity in 802.11 based Wireless LAN is relatively different from cellular atmosphere.

In this chapter we will discuss the various components contributing to delay between the GPRS and 802.11 based Wireless LAN during the vertical handover, to get better the performance through vertical handover we also discuss the various optimization techniques at (network and transport layers), [56].

5.2 Vertical Handover

Between the heterogeneous wireless networks the handover process can be set apart in to handover execution and handover decision process. In handover decision process both the mobile node and network decides that when the handover process will be occur. After taken handover decision, the handover execution process continues. The handover decision process involves supplementary network information such as replica address detection time in Mobile IPv6, when handover decision and detection process overlaps. The handover delay can be alienated in to three main mechanisms, [56].

5.2.1 Discovery Time (t_d)

In this process via link layer beacon, the mobile terminal perceive that it is in the under the range of new wireless network from where it get the Router Advertisement (RA) of new access router.
Through the RA and triggered-based router solicitation from access router in the visited network, the MT detects the coverage on new network, [57].

5.2.2 Address Configuration Period (t_c)

In this period the MT receive the Router Advertisement (RA) and updates its routing table and assign the new Care of Address (CoA) to all its interfaces. This new CoA based on new access router accessible form RA, [57].

5.2.3 Network Registration Period (t_r)

In this period the binding updates are transmit to Home Agent (HA) as well as correspondent node and collect the acknowledgement from correspondent node. As binding acknowledgement from correspondent node is elective, so we consider the situation when mobile node accept packet from correspondent.

Thus an IP level handover consist of td, tc and tr. This recommended that by optimizing IP-level vertical handover delay would really involve minimizing the discovery time and network registration period, where as address configuration period based on mobile device computing potential, [56].

5.3 Vertical Handover Procedures

In this topic we will discuss the vertical handover procedure between Wireless LAN and WCDMA, UMTS cellular network. The WCDMA cellular network overlays the Wireless LAN network. In vertical handover procedure we divide the traffic in to two classes,

- Real Time Services (RTS)
- Non Real Time Services (NRTS)

To minimize the delay during the vertical handover the procedure algorithm uses the agent and sub-agent technique of management in case of mobility. In case of Mobile Download (MD) the handover procedure includes the process of terminating the connection of mobile host from Wireless LAN coverage are and establishes the connection to WCDMA cellular network coverage area.

As the distance of mobile host increases from the access point of Wireless LAN, the signal strength becomes weaker. During the handover process from WCDMA cellular network to Wireless LAN, the threshold scheme is used. The signal strength is compared with the threshold value, if it is less than threshold value then mobile host shifts from Wireless LAN to WCDMA cellular network and handover is occurred. The Mobile Host (MH) sends a ready request message to Mobile Agent (MA) after receiving the advertisement message from the cellular subnet agent of the network.

The received message packets are buffered by the subnet agent of WCDMA cellular network, which is configured as an overlay network. The Mobile Agent (MA) sends back the received message packet to the subnet agent. The subnet agent receives the registration message on its turn and then starts sending the buffered message packets. In the handover process the inbound message packet are saved by the buffering technique [58].

When the signal strength of the network is weaker as compare to the threshold value then handover algorithm is executed. When the handover is occurred the Mobile Agent (MA) sends a message to the Base Station (BS) of cellular network to update the path and allocate the available channel. The registration of Mobile Agent (MA) and the Subnet Agent (SA) is done, when Subnet Agent (SA) is registers the Mobile Host (MH) then the received packets in the Subnet Agent’s (SA) buffer is sent to the Base Station (BS) of WCDMA cellular network then disconnection message is sent to Wireless LAN access point. The signalling flow chat of Mobile Download (MD) can be expressed as below

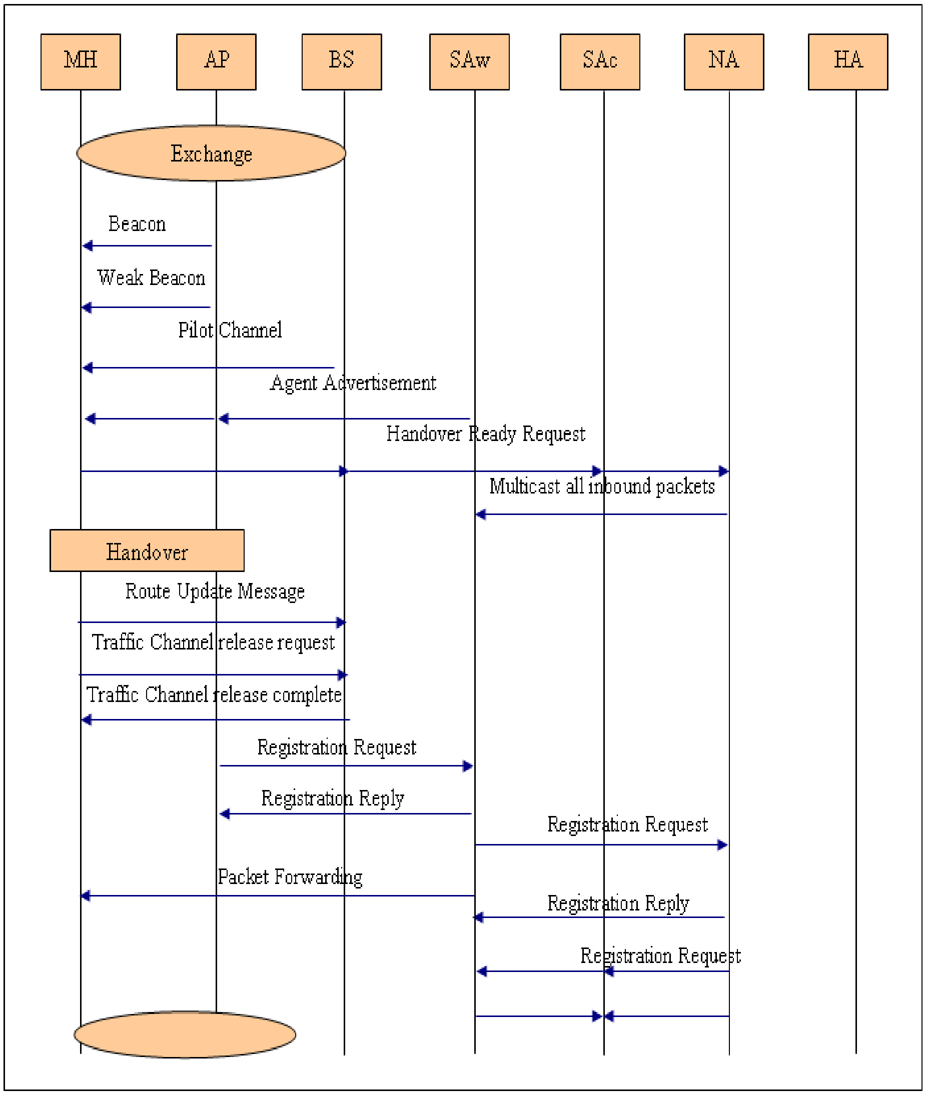

Figure 5.1 Mobile Downword Handover Signaling Flow [61]

Now when the Mobile Host (MH) moves from WCDMA cellular network coverage area to WLAN access point coverage area, then same process of switching of Mobile Host (MH) is done.

The signalling flow chart of occurrence of handover from WCDMA cellular network to WLAN can also be demonstrated as followed [60, 61].

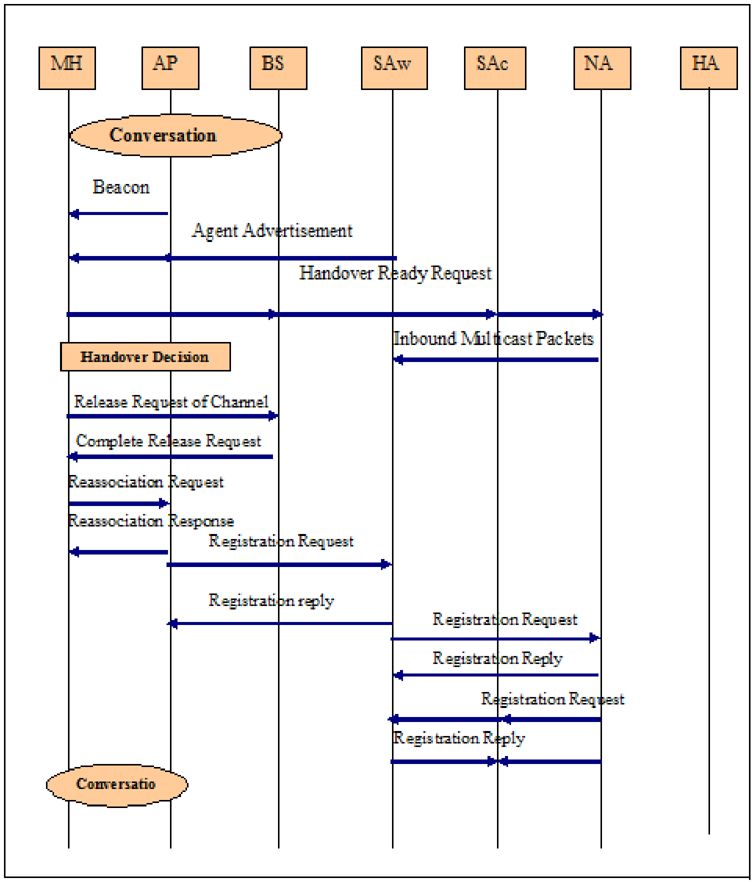

Figure 5.2 Mobile Upword Handover Signaling Flow [61]

5.4 Power Saving During Handover

During the handover procedure the power saving scheme can be done by determination of the time span during which the signal strength region is monitored and also by the determination of time span during which Wireless LAN card of the Mobile Host (MH) is activated. For the power saving purpose the location information of the Mobile Host (MH) and Base Station (BS) are utilized. During the handover procedure, the Mobile Upload (MU) factor is not as such important because the WCDMA cellular network also covers the Wireless LAN Access Point (AP) coverage area.

When the Wireless LAN card of the Mobile Host (MH) is activated it receives the signal strength message from the Wireless LAN Access Point (AP). When the Subnet Agent's (SA) transmitted advertisement message is received by the Mobile Host (MH), it sends back a hand of ready message to Mobile Agent (MA) then Mobile Agent (MA) transmits in bound packets to Subnet Agent (SA) of Wireless LAN. This process goes on and Mobile Host (MH) continuously monitors the signal strength of the coverage area and decides whether to handover or not. When the condition of and handover are fulfilled then handover is occurred [60, 61].

5.5 Vertical Handover Algorithm

The Radio access technology WCDMA of UMTS cellular network differs in many aspects from Wireless LAN Radio specifications. Wireless LAN is used in covered areas such as building campuses because it is low cost in interior of buildings with high data rate whereas WCDMA cellular network covers wide range as compare to Wireless LAN but has the higher cast and low data rate.

The quantitative comparison of Wireless LAN Access Pinot (AP) and UMTS Base Station (BS) per Coverage area, cost and data rate is shown below

- UMTS Cellular Network Base Station (BS)
    1. Coverage unlimited
    2. Data rate 9.62 – 300 Kbps
    3. Cost – High

- Wireless LAN Access Point (AP)
    1. Coverage limited
    2. Data rate 1 – 11 Mbps
    3. Cost - Low

Since data is of two types according to delay sensitivity, one is conversation and streaming data which is delay sensitive and often called as real time services and the second is other data type which is not related to real time services. Now there is trade of corresponding to handover delay and throughput operations.

During the delay sensitive that is real time services handover operation should be faster as it is possible, because in this case we have to minimize the delay during the handover process. In case of non real time services the transmitted data is more important than that of delay, therefore connection to WALN Access Point (AP) coverage area should be maintained as long as possible [59, 61].

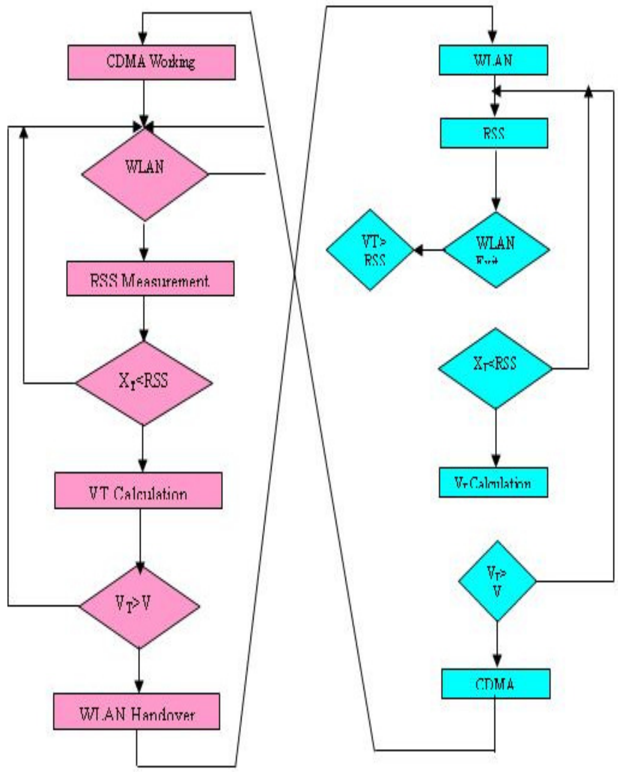

Figure 5.3 Vertical Handover Algorithm

The variable used to determine the vertical handover algorithms are

- X_T Predefined Threshold value when the handover occur
- V_T Velocity Threshold whether a fast Mobile Station (MS) or slow MS

In the **Figure 4.5** we use XT (fixed threshold) and VT (velocity threshold) variables to determine the vertical handover algorithm. When the mobile station is larger then velocity threshold then the mobile station is connected to WLAN and signal strength will be fall as the mobile station move away from the WLAN access point. The mobile station search the other near access points, if signal strength from other access points are not enough strong then handover algorithm use this information to make decision of handover to CDMA network, with other information [7].

5.6 Control Mechanism of Vertical Handover

To reduce the handover delays in the handover transition region the Received Signal Strength (RSS) should be low than that of real time services. The handover time is not so much important in case of Mobile Upload (MU) because the WCDMA cellular network has large coverage; therefore the value of received signal from WLAN should be higher than other values. Now to minimize the overall handover delay, the inbound packets should be multi vertical handoff problems in WLAN/GPRS cellular network assisted to Subnet Agent (SA) of target network. The Subnet Agent

(SA) buffered the multicast data and then sent to Base Station (BS) before the expiry of timer otherwise the received data will be discarded.

The basic control mechanism of vertical handover structure can be expressed as

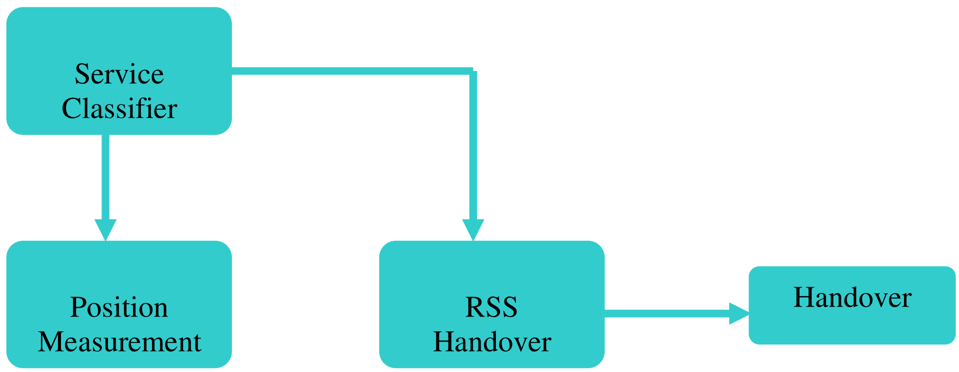

Figure 5.4 Control Mechanism of Vertical Handover [59]

In this mechanism the classifier module recognizes the traffic type either it will be real time service or the other data then it sends control signals to the handover decision module and also to measurement block [59].

5.7 Causes of Vertical Handover

1. The mobility of Mobile Host (MH) from UMTS coverage area to WLAN Access Point Coverage area is the major cause of Vertical Handover.
2. System Load Control
3. Interference
4. Power Emission (PE)

5.8 Problems in Vertical Handover

Wireless network is the major medium of communication between the people in today's tremendously growing world of Telecommunication. The demand of this type of communication is increasing day by day, therefore to handle this demand more wireless networks have to establish to obtain the high data rate requirement. In case of Vertical Handover (VHO) due to symmetric nature Received Signal Strength (RSS) is not compatible with Vertical Handover (VHO). When Mobile Terminal discovers the WLAN coverage area its starts the MI process because MI decision depends upon the availability of preferred network. Now if more than one Wireless LAN Access Point (AP's) are present in the coverage area then the MT establishes the connection with the AP from which it receives the strongest Received Signal Strength (RSS).

Now in Mobile Out (MO) scenario the Mobile Terminal MT performs only one handoff at the end of Wireless LAN, where network is expected to unavailable. So according to scenario discuss the above the Vertical Handover (VHO) faces the following problems.

1. To minimize the number of surplus handover processes to reduce the network load.

2. To maximized the underlay network resources.
3. To assure the required degree of Quality of Services (QoS)
4. To reduce the congestion of the network in case of Mobile In (MI).
5. To prefer the handover in case of Mobile Out (MO) in the underlay network [63].

5.9 Vertical Handover Strategies

In case of Vertical Handover (VHO) normally three strategies are used to resolve the problems. These techniques are basically the extension to the common handover strategies. In these strategies we use vertical handover algorithms in required three dimensions.

5.9.1 Dwelling Timer Strategy

The dwelling timer strategy is basically the traditional strategy of measuring Received Signal Strength (RSS) with the combination of network overload parameters. The dwelling timer handover initiation technique is used to optimize the Wireless LAN resources.

In this technique the association of Mobile Terminal (MT) with Wireless LAN enhances the user throughput, even in case of transition of period. The maximum value of dwelling timer depends upon the difference between the rates of both networks. However the handover delay phenomena is even dominant here with dwelling timer strategy. Hence the dwelling timer technique is an appropriate method of Vertical Handover (VHO) to maximize the network resources but due to large dwelling timer there will be some surplus interruptions during real time applications. Therefore to handle the interruption problems we use specific signal threshold phenomena according to the requirements [63].

5.9.2 Artificial Intelligence (AI) Strategy

In this technique Artificial Intelligence (AI) is used with network parameters in case of mobility and handover decision. Fuzzy Logic and neural network criteria are implemented to detect the signal delay and the making of handover decision. These Artificial Intelligence (AI) approaches are very complex and difficult to apply on practical system [63].

5.9.3 Power Consumption Strategy

In Power Consumption technique the power consumption and bandwidth for the available networks are calculated and according to these measurements the Mobile Terminal (MT) decide to handover, since the power consumption and bandwidth parameters are different in case of Heterogeneous Networks. Therefore a specific policy for these parameters has to be defined for each network. In this technique the Mobile Terminal (MT) frequently measures these parameters and then decides to handover for optimal value of the parameter. There is a difficulty in this approach because all the parameters not easy to measure especially in case of large Cellular Network the available bandwidth and the channel conditions are changed dynamically [63].

5.10 Proposed Solution

Now in comparison of these techniques we normally propose the first one in case of ALIVE Handover by using Received Signal Strength (RSS) phenomena to estimate the Wireless LAN coverage [63]. Also the simplest method to increase the RSS is transmitting power method. If we increase the transmit power even by a fraction, we get prominent increase in RSS.

5.10.1 ALIVE Handover

The MT scans periodically the available Wireless networks and calculates their RSS and then after the calculation the best wireless network select on the basis of RSS using vertical handover algorithms. Within WLAN according to the predefined Vertical Handover Algorithm with path loss channel propagation and shadow fading the RSS can expressed as

$$RSS = \mathrm{P_T} - \mathrm{L} - 10n\log(d) + f(\mu\,,\ \sigma\,) \qquad [63]$$

Where PT is transmitted power, L is power loss, n is path loss exponent, d is distance between Mobile Terminal MT and the Access Point (AP). μ is mean and is standard deviation.

Further we use Application Signal Strength Threshold (ASST) in corporation with VHO decision. In case of overall optimization of the system the RSS can be expressed during discrete time as following.

$$RSS[k] = \mu RSS[k] + \mathrm{N}[k] \qquad [63]$$

Where k is time index and N [k] is fading.

Now the average $\overline{\text{RSS}}$ [*k*] can be calculated using moving average [63]

$$\overline{RSS}\,[k] = \frac{1}{\mathrm{W}_{av}} \sum_{i=0}^{\mathrm{W}_{av}-1} RSS\,[k-i] \qquad [63]$$

The rate of change of RSS, S[k] can be expressed as

$$\mathrm{S}\,[k] = \frac{\dfrac{2}{\mathrm{W}_s} \displaystyle\sum_{i=0}^{\frac{\mathrm{W}_s-1}{2}} \overline{RSS}\,[k-\mathrm{W}_s+1+i] - \dfrac{2}{\mathrm{W}_s} \displaystyle\sum_{i=\frac{\mathrm{W}_s}{2}}^{\mathrm{W}_s-1} \overline{RSS}\,[k-\mathrm{W}_s+1+i]}{\mathrm{W}_s\mathrm{T}_s}$$

$$EL\,[k] = \frac{\overline{RSS}[k]\ - \gamma}{S[k]}$$ [63]

Where γ denotes the ASST and EL[k] denotes the application specific timer interval during which MT remain to uses Wireless LAN.

The MT compares different RSS from different Base Station (BS) to decide with which it will be connected before the execution of VHO. When the calculated RSS is less than or equal to MO threshold, MOTWLAN and handover delay threshold THO then MT starts the handover process. The first parameter controls unnecessary handovers due to signal decay, whereas lifetime part enables MT for best utilization of WLAN resources. The value of MOTWLAN will be set a few dB greater than the WLAN sensitive values. The value of handover delay parameter THO will be set after analyzing discovery delay, authentication delay and registration delay components between two access technologies.

Now it is important to note that with larger window size estimation will be improved whereas the delay in handover performance will also be greater. Therefore to reduce this problem, variable window size will be used to improve the handover performance. So Wav and Ws can be expressed as.

$$W_{av} = \max\left(10, \left\lfloor \frac{D_{av}}{VT_s} \right\rfloor\right)$$ [63]

$$W_s = 2 \times \max\left(50, \left\lfloor \frac{D_{av}}{VT_s} \right\rfloor\right)$$ [63]

Where Dav and Ds stands for the average and slope distance windows. $\lfloor . \rfloor$ denotes the greatest lower bound function and v denotes the terminal velocity away from AP.

In case of MI numerous factors will be considered among which Wireless LAN availability is major one, which is represented by RSS. Here the MT starts MI to Wireless LAN if average RSS is greater than MITWLAN.

5.10.2 Number of Handovers

Respective to signal traffic the major effect is due to number of handover. This effect overloads the whole network and degrades the performance. The phenomenon of number of handover is denoted by NHO. It is defined as the sum of Mobile In (MI's) and Mobile Out (MO's) with in Wireless LAN and cellular network. So it is a random variable depending upon probabilities of In and Out.

Mathematically it can be expressed as

$$P_{MO}[k+1] = P_{c/w}[k+1]\ P_w[k]$$

$$P_{MI}[k+1] = P_{w/c}[k+1]\ P_c[k]$$

The mobility of Mobile Terminal (MT) between two networks can be described by non Homogeneous Markov Chain (A sequence of random number). Each state of Markov Chain represents the network with which Mobile Terminal (MT) is connected, whereas the transition probabilities are PMO [k] and PMI [k]. Now Mobile Out (MO) and Mobile In (MI) can be calculated according to the transition reward, where number of expected MO's and MI's are denoted as respectively NMO, NMI. So the expected number of handover can be expressed as

$$E\{N_{HO}\} = E\{N_{MO}\} + E\{N_{MI}\}$$

$$E\{N_{HO}\} = \sum_{K=1}^{K_{max}} (P_{MO}[k] + P_{MI}[k]) \quad [63]$$

5.10.3 Bandwidth Resources

The allocation of bandwidth to MT is controlled by the time interval up to which MT stays in WLAN or UMTS networks. Also the state of WLAN to which MT is connected is a part of the bandwidth allocation criteria. WLAN has two states WLAN Up and WLAN Down. When the received wireless signal is greater than sensitivity threshold α then it is denoted by WLAN Up state, otherwise it is denoted by WLAN Down state.

Now consider the probability of WLAN Up state at any time k the n

$$P\ [k] = \Pr \left\{ RSS[k] > \alpha \right\} \quad [63]$$

$$P\ [k] = Q \left(\frac{\alpha - \mu[k]}{\sigma} \right) \quad [63]$$

The MO distance changes in case of Adaptive handover, therefore WLAN Up duration also change, so the performance of system will be analyzed during transition period which depends upon the distance between RSS Access Point and WLAN sensitivity region. Here transition period staring point is denoted by Kstart then the WLAN efficiency during the Up state over lifetime can be expressed as.

$$\zeta_{LT} = \sum_{K = K_{start}}^{K_{max}} \overline{PMO[k]} \ \frac{\sum_{h=1}^{K} P[h]}{K} \quad [63]$$

Where PMO is the calculated version of PMO during time interval [1, Kmax], where Kmax is time duration within which MT reaches the WLAN coverage area. Therefore the available bandwidth BWAv with data rates Rw and Rc can be calculated as.

$$BW_{AV} = \frac{\zeta\ LT\ R_w\ (\overline{K_{MO}} - K_{start}) + R_c\ (K_{max} - \overline{K_{MO}})}{K_{max} - K_{start}} \qquad [63]$$

5.10.4 Packet Delay

With in transition region the RSS degradation has the effect on probability of packet delay. To calculate the packet delay, we suppose the Threshold value θD59 for packet delay within existing hop as end-to-end delay for real-time application of source to destination. A packet is said to be delayed if its delay is greater then θD.

Now the average probability of the packet delay is denoted by D and can be calculated as,

$$D = \sum_{K=start}^{K_{MO}} \frac{PD[k]}{(K_{MO} - K_{start} + 1)} \qquad [63]$$

Where PD[k] denotes the probability of delayed packet. Also the probability of Wireless LAN equals to probability of delayed packet Threshold. Here we will use the value of average KMO for approximation instead of KMO. This type of approximation results into an accurate value for a wide range of system parameters [63].

5.11 Simulation Results

According to above calculation we have simulated the VHO parameters using MATLAB. In this simulation graphs we have try to show how we can optimize different parameters to improve the QoS with best connection regardless of devices anywhere anytime. Table show the list of simulation parameter values. In this simulation graph we have interpreted the general behaviour of these parameters during the optimization of handover techniques. For detailed and deep analysis of these parameters a complete system model is needed to develop.

Table 5.1: Simulation Result Parameters

Parameters	Values	Parameters	Values
P_T	100mWatt	M_{IT}	-80dB
n	4dB		
σ	7dB		
Ds	10m		

M_{OT}	-85dB		

The **Figure 5.5** shows the relation between transmitted power and RSS. The simplest model to improve RSS is to increase the transmit power. As we increase transmit by a little fraction the RSS will be increased prominently. In **Figure 5.5** blue colour shows the existing RSS and red colour shows the RSS values after the increment in transmitted power. This solution is practical only in open areas but in urban areas it is not feasible. Therefore in urban areas many other parameters are to be handled.

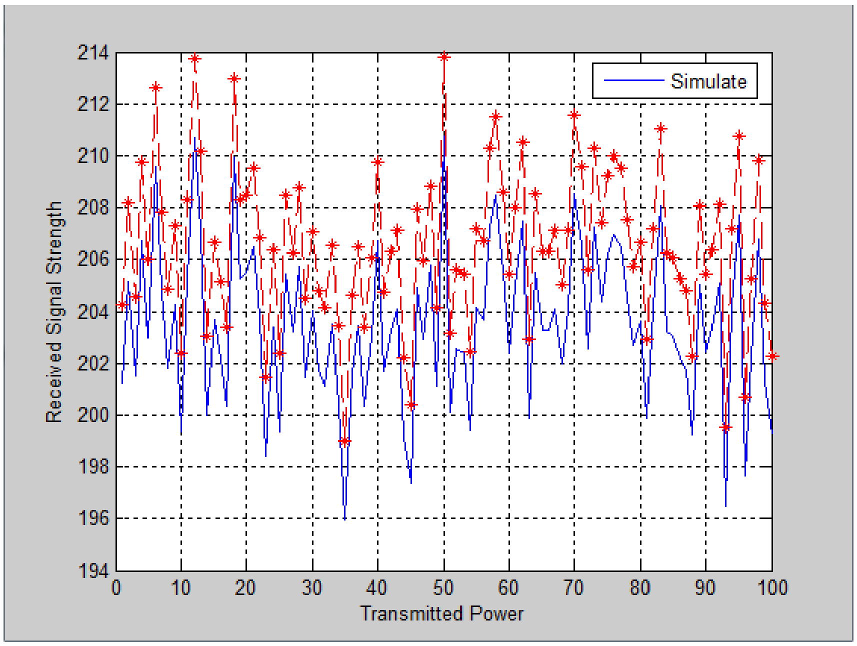

Figure: 5.5 Received Signal Strength

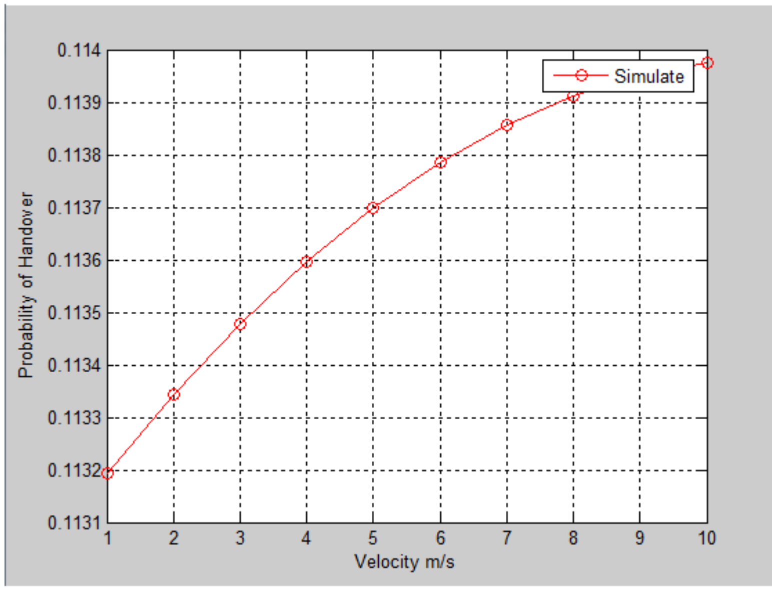

Figure: 5.6 Probability of Expected Number of Handover

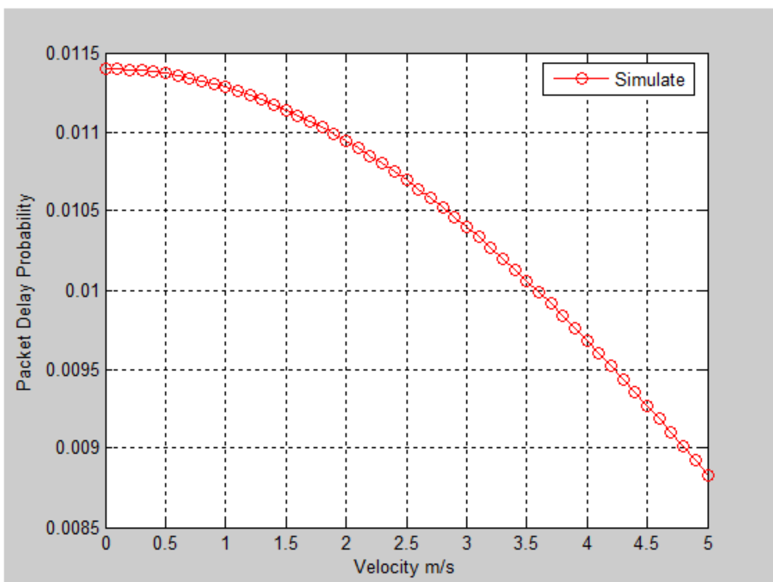

Figure: 5.7 Packet Delay Probability

In **Figure 5.6** the mobility of Mobile Terminal (MT) is explained moving away from Wireless LAN Access Point (AP) with the constant velocity.

According to ALIVE Handover algorithm it dynamically adopts the Mobile Terminal (MT) velocity. Also the value of MIT is taken as less than the value of MOT to decrease the unnecessary number of handovers and ping pong effect. Here according to ALIVE handover the probability of handover increase with the increase in distance along x-axis. It also shows that the number of unnecessary handovers using ALIVE handover algorithm is less than that of traditional hysteresis handover.

In **Figure 5.7** velocity is taken along horizontal axis and probability of packet delay is taken along vertical axis. The graph shows that with the increase in distance the probability of packet delay decreases. One thing in this case is important that according to ALIVE handover algorithm the probability of packet delay is not less than that of traditional hysteresis handover.

CHAPTER 6: CONCLUSION

6.1 Conclusion

In first chapter brief history of cellular communication and different technologies of UMTS standardized by 3GPP illustrated. The evolution of cellular communication system as 1st generation, 2nd generation and 3rd generation are described. Also the emerging technologies in Wireless LAN such as WIMAX, WiBro and HSPA are explained.

In second chapter Wireless LAN its architecture and main components are explained, also in this chapter we have detailed view of Wireless LAN protocol stack and wireless LAN standards designed by IEEE 802.11 such as 802.11a, 802.11b, 802.11g and HiperLAN. Here in this chapter MAC Frame Format of IEEE standards and security issues involved in Wireless LAN like War Chalking, Privacy Protocol Flaws etc are described.

The Third chapter contains the detailed study of UMTS cellular communication system. Here we illustrate the UMTS architecture, its domain and protocol stacks. The UMTS interfaces in WCDMA technology like Iu, Ib, Iur, and Uu etc interfaces are explained. The WCDMA radio access technology with its transport channels and techniques like FDD and TDD in case of downlink and uplink is illustrated. In this chapter we also have detailed view of UMTS handover its causes and types along with algorithms uses in handover techniques.

In Fourth chapter the comparison of vertical handover techniques is explained. By using appropriate technology we can suggest the best handover model to the network interface. The implementation of vertical handover model depends upon the universal seamless handover architecture (USHA), which is practical and simple solution. The handover initiation techniques are composed on the basis of signal strength, hysteresis and threshold. In vertical handover for reliable configuration Smart Decision Model (SDM) is used through which normal phase and priority phase cases are discussed. The technical feature of vertical handover comprises the mobility engineering, resource management and service management. Vertical handover have some limitations in case of connection handling as compared with TCP/IP connection mechanism. In vertical handover all connections are dealt with same manner and the second limitation is the need of same network interface, because due to these limitations the vertical handover is not feasible for ad-hoc technologies such as ad-hoc IEEE standards IRDA and Bluetooth. This means that due to peer-to-peer connection an important part of wireless network diversity is missed.

In Fifth chapter the vertical handover procedures and algorithms are discussed. In Heterogeneous networks, the handover process is divided into two parts, handover decision and handover executions. In vertical handover procedures the traffic is divided into two classes, real time services and non real time services. During the handover procedure power saving scheme can be implemented by determination of time span during which the signal strength region is monitored. In case of control mechanism of vertical handover delay is reduced during handover transition by the received signal strength to be low then the real time services. The handover time is not important in case of mobile upload because WCDMA network has large coverage. The basic control mechanism consists of four parts service classifier, position measurement, RSS handover decision and handover execution.

In case of vertical handover the Received Signal Strength (RSS) due to symmetric nature is not compatible with vertical handover. When a Mobile Terminal (Mt) discovers the Wireless LAN area it starts the Mobile In (MI) process because MI decision depends upon availability of preferred network. Now if more then one Wireless LAN Access Points (AP) in range then MT establishes the connection with strongest RSS. In Mobile Out (MO) scenario MT performs only one handover at the end of Wireless LAN, so in this scenario vertical handover faces the following problems, to minimize number of surplus handovers, maximize the network resources to assure the required QoS to reduce the congestion in the network and to prefer handover in case of MO in the underlay network. To overcome these problems, we use different techniques in different dimension. To enhance the user throughput even in transition period, dwelling time technique is used. The maximum value of dwelling timer depends upon the difference between the data rate of both networks.

In case of mobility and handover decision Artificial Intelligence (AI) technique is used. Fuzzy Logic and Neural network criteria are implemented to detects the signal delay and make the handover decision. The power consumption technique is used to calculate bandwidth available for the network and the consumed power. According to these measurements MT decides to handover or not because power consumption and bandwidth parameter are different in case of different networks.

Respective to signal traffic major effect is due to number of handover. The phenomenon of number of handover is the sum of MI and MO with in Wireless LAN and UMTS networks. It is a random variable depending upon the probability of MI and MO. The probability of handover in and out is explained by simulation results using ALIVE Handover algorithm. It shows that the number of unnecessary handovers using the ALIVE Handover algorithm is less than that of traditional hysteresis handover. The degradation of RSS with in tradition region affects the probability of packet delay. The simulation graph of packet delay shows that with the increase in distance the probability of packet delay decreases. In this case the important factor is that according to ALIVE Handover probability of packet delay is not less then that of traditional hysteresis.

6.2 Future Work

In future work will be done to minimize the surplus vertical handovers, for this purpose ALIVE Handover technique strategy will be used and need to optimize its algorithms, because ALIVE Handover techniques minimize the unnecessary handovers.

Since in case of ALIVE Handover the probability of packet delay is not less than traditional handover, therefore in future the balanced combination of ALIVE Handover technique and RSS threshold technique is suggested. So there balanced combination may be feasible to optimize the unnecessary number of handover and packet delay.

REFERENCES

[1] Digital Cellular Telecommunication System UMTS Networks 3GPP Release 5.

[2] UMTS Technical Note By Neatest,

[3] Yue Chen; "Soft Handover Issues in Radio Resource Management for 3G WCDMA Networks". Queen Mary University of London, 2003.

[4] B.G Evans and K Baughan; "Vision of 4G, Electronic and Communication Engineering Journals", 2002.

[5] Cisco WLAN Course 2004, Ankara 20.20.2005.

[6] Wireless Communication and Mobile Computing, published by Wiley inter science 2004.

[7] Dayou Quan, Cavendish, Ting Wang, "WIMAX Services over Transport Networks", NEC, USA.

[8] Mohammad Anas, Knghee, Jee Hwan, Kiseon Kim; "An Efficient Subscriber and Power Allocation Algorithm for Dual Service Provisioning in OFDMA Based WiBro System", Department of Information and Communication (GIST), Korea.

[9] Simulating High Speed Downlink Packet Access by N2N Soft White Paper Series.

[10] IEEE 802.11 work group IEEE 802.11 Wireless Local Area Networks http://grouper.ieee.org/groups/802/11/ The Institute of Electrical and Electronics Engineers, Inc. (IEEE), 2003.

[11] Bob Elliot, Elsa Mardrigal; "Choosing the right WLAN Architecture", www.panduit.comhttp://www.panduit.com/groups/MPM-WC/documents/Article/107242.pdf, , June 2006.

[12] Bradley Mitchell; "Wireless Standards 802.11b, 802.11a, 802.11g and 802.11n", www.compnetworking.about.com/cs/wireless80211/a//aa80211standard.htm.

[13] Markus Kujala; "WLAN Standards and Wireless Networking Security", Department of Telecommunication Software and Multimedia Laboratory, Helsinki University of Technology, May 28, 2008.

[14] Webopedia *Wi-Fi* http://www.webopedia.com/TERM/W/Wi_Fi.html Jupitermedia 2003.

[15] Marks, L. Victor *The 802.11g standard . IEEE* IBM developer Works Wireless articles http://www-106.ibm.com/developerworks/wireless/library/wi-ieee.html

[16] Valerie E. Zelenty; LAN, MAN Standard Committee of IEEE Computer Society; "Wireless LAN Medium Access Control (MAC) and Physical Layer (PHY) Specification", http://citeseerx.ist.psu.edu/viewdoc/summary?doi=10.1.1.2.3533.

[17] Azeem Muhammad Khan; "QAW802.11 Wireless LAN Handoff Process Latency Optimization", Faculty of Computer Science and Engineering, Ghulam Ishaq Institute of Engineering Science and Technology, Pakistan, May 2004.

[18] Airopeek http://www.wildpackets.com/products/airopeek Wildpackets, Inc. 2003.

[19] Kujala, M and Savolainen, "M *Wireless Local Area Network Security"* T-110.452 Special seminar course for practical information systems security Telecommunications Software and Multimedia Laboratory Helsinki University of Technology, March 2003.

[20] Netstumbler http://www.netstumbler.com/ Netstumbler, 2003.

[21] Maijala, Ville; "*Warchalking - the big threat or a key to more secure WLANs?",* T-110.501 Seminar on Network Security Telecommunications Software and Multimedia Laboratory Helsinki University of Technology, November 2002.

[22] Airsnort http://airsnort.shmoo.com/ the shmoo Group, 2003.

[23] Rager, Anton Wepcrack- An 802.11 key breaker.
[24] http://www.wisegeek.com/what-is-umts.htm
[25] Harri Holma, Antti Toskala; "WCDMA for UMTS: Radio Access for Third Generation Mobile Communications", Wiley; third edition (2004),ISBN: 978-0-470-87096-9}
[26] Carlos Leonel Flores Mayorga; **"**SIP-Supported Soft Handover of the Convergence of Wireless Enterprise Network and 3 GPP IP Multimedia Subsystem**",** Alborg University Denmark. June, 2007.
[27] Nikos Drakos, Ross Moore; **"**GPRS and 3G Wireless Networks**",** Computer Based Learning Unit. University of Leeds, Mathematic Department, Macquarie University of Sydney.
[28] Dr. Jonathan P.Castro; **"**The UMTS Network and Radio Access Technology**"**, ISBN: 0-471-81375-3.

[29] Aricent Leaders in Communication Software; HSS to Provide Cost-Effective Solutions for 3G Equipment Vendors Based on the Intel® IXP23XX Product Line of Network Processors, New Delhi, October 26, 2004.

[30] 徐延源; "Introduction to Wireless Overlay Networks", September 17, 2003.
[31] Petri Possi; "UMTS World / 3G History and Future Milestones", www.UMTSWorld.com.
[32] Stijn N. P. Van Cauwenberge; "Study of Soft Handover in UMTS", Technical University of Denmark, University of Gent, Belgium, July 31, 2003.
[33] Harri Holma, Antti Toskala; "WCDMA for UMTS: Radio Access for Third Generation Mobile Communications", Wiley; third edition (2004),ISBN: 978-0-470-87096-9.
[34] Lawrence Harte; "Introduction to WCDMA", www.althosbooks.com.
[35] Cosic Esat, Kuleuven; "Advanced Security For Personal Communication Technologies", www.cosic@east.kuleuven.ac.bc,
[36] Adrian Rawlings; "UMTS Part 2, Is the future of UMTS is secure?", Euronet Associates Ltd, 01.03.1997.
[37] Richard A. Good; “Implementing Vertical Handovers between IEEE 802.11 and UMTS Cellular Networks”, Department of Electrical Engineering, University of Cap Town.
[38] J.S. Ransbottom “Mobile Wireless System Interworking with 3G and Packet Aggregation for Wireless LAN” PhD, 2004. [ONLINE] Available: http://scholar.lib.vt.edu/theses/available/etd-04222004-021140/unrestricted/Ransbottom_Dissertation_Final.pdf
[39] A.K. Salkintzis “Interworking Techniques and Architectures for WLAN/3G Integration towards 4G Mobile Data Networks”, 2001. [ONLINE] Available: http://evolute.intranet.gr/WLAN-3G_Interworking_towards_4G.pdf
[40] H.A. Chan “Interworking WirelessLAN and PLMN Wireless Data Network Systems”, 2004.
[41] Ling-jyh Chen, Tony Sun, Benny Chen; **“A Smart Decision Model for Vertical Handover, ”** Department of Computer Science, university of California at Los Angeles, CA 90095, USA.
[42] M. Angermann and J. Kammann, “*Cost Metrics For Decision Problem In Wireless Ad Hoc Networking,*” IEEE CAS Workshop on Wireless Communications and Networking, 2002.

[43] L.-J. Chen, T. Sun, B. Cheung, D. Nguyen, and M. Gerla. "*Universal Seamless Handoff Architecture in Wireless Overlay Networks*," Technical Report TR040012, UCLA CSD, 2004.

[44] Enrique Stevens-Navarro, **"**Vertical Handoff in Heterogeneous Wireless Networks,**"** Department of Electrical and Computer Engineering, University of British Columbia, October 6, 2006.

[45] M. Stemm and R. Katz, \Vertical Hando®s in Wireless Overlay Networks," *ACM Mobile Net-works (MONET) Special Issue on Mobile Networking in the Internet*, vol. 3, pp. 335{350, Summer 1998.

[46] L.-J. Chen, T. Sun, B. Cheung, D. Nguyen, and M. Gerla. "*Universal Seamless Handoff Architecture in Wireless Overlay Networks*," Technical Report TR040012, UCLA CSD, 2004. USHA (Universal Seamless Handover Architecture).

[47] A. Fox, S. Gribble, Y. Chawathe, E. Brewer, and P. Gauthier, "*Cluster-based Scalable Network Services*," SOSP'97, 1997.

[48] Xiaoxin Wu, Mukherjee B & Ghosal D (2004) Hierarchical architectures in the thirdgeneration- cellular Network. IEEE Wireless Communications 3: 62-71. 15.

[49] Mika Ylianttila, **"**Vertical handoff and mobility system architecture and transition analysis,**"** Faculty of Technology, Department of Electrical and Information Engineering, Infotech Oulu, University of Oulu, 2005.

[50] Jean Turrilhes, Casey Carter; **"**A Protocol for fine grained peer-to-peer vertical handoff**",** Mobile systems and Services Laboratory Palo Alto, March 11th 2002.

[51] Gregory P. Pollioni, "Trends in Handover Design", *IEEE Communications Magazine*, vol. 34, March 1996, pp. 82-90.

[52] P. Marichamy, S. Chakrabati and S. L. Maskara, "Overview of handoff schemes in cellular mobile networks and their comparative performance evaluation", *IEEE VTC'99,* vol. 3, 1999, pp. 1486-1490.

[53] Nasif Ekiz, Tara Salih, kemal Fidanboylu; "An Overview of Handoff Techniques in Cellular Networks", Volume 2.

[54] J. Naslund, C. Carneheim, C. Johansson, S.-O. Jonsson, M. Ljungberg, M. Madfors, J. Skold, "An Evolution of GSM", *IEEE 44th Vehicular Technology Conference*, vol. 1, 1998, pp. 348-352

[55] http://www.itu.int/md/T05-SG19-C-0025/en

[56] Rajiv Chakravorty, Pablo Vidales, Kavitha Subramanian, Ian Pratt; "Performance Issues with Vertical Handover- Experience from GPRS Cellular and WLAN Hot Spot Integration", Computer Laboratory and Labortary for Communication Engineering, University of Cambridge.

[57] D. jhonson, C. Perkins and J. Arko; "Mobility Support in IPv6", in IETF draft (draft-ietf-mobileip-hmipv6-05.txt), 2001.

[58] Hyosoon Park, Sunghoon Yoon, Tachyoun Kim, Jungshin Park, Misun Do and Jaiyong Lee, " Vertical Handoff Procedure and algorithm between IEEE802.11 WLAN and CDMA Cellular Network".

[59] 3G TS 23.107: "UMTS QoS Concept and Architecture".

[60] Mi-Sun Do, Youngjun Park, and Jai-Yong Lee, "Channel Assignment with QoS Guarantees for a Multi-Class Multi-Code CDMA System," accepted for publication in IEEE Transactions on Vehicular Technology.

[61] Marry Nariestti, “Implementation of Vertical Handoff Algorithm Between IEEE 802.11 WLAN And CDMA Cellular Network”.
[62] Jang-Sub Kim, Min-Young Chung, ” A Vertical Handoff Decision Process and Algorithm Based on Context Information in CDMA-WLAN Interworking”
[63] Ahmad. H Zahran, Ben Liang, Aladin Saleh; ”Signal Threshold Adaptation for Vertical Handoff in Heterogeneous Wireless Networks”.
[64 http://en.wikipedia.org/wiki/Vertical_handoff
[65] http://www.cs.dal.ca/news/def-1600.shtml
[66] http://herkules.oulu.fi/isbn9514276922/isbn9514276922.pdf
[67] www.ens-lyon.fr/LIP/RESO/icps2006/slides/ICPS06_Chang.ppt